Safer Ships

Cleaner Oceans

船舶更安全 · 海洋更干净

JB-QBC-BS10

固定式探火和失火报警系统 | 固定式局部水基灭火系统

设计应用手册

Fixed fire detection and fire alarm system
Water mist extinguishing control system

Design and Application manual

目 录

1 JB-QBC-BS10 型火灾报警控制器

1.1 概述

JB-QBC-BS10 型固定式探火和失火报警系统是基于模拟量探测，专门设计用于满足国内外船舶市场需用的报警系统，人机界面友好，常规量的探测器可以通过信号输入模块接入本系统。

1.2 安装

JB-QBC-BS10 型火灾报警控制器包括下列部件：火灾报警控制面板，接口板，回路板，电源板和灭火保护板。

有两种安装方式可供用户选择：壁挂式或嵌入式，如果选择嵌入式安装方式，只需将火灾报警面板从控制箱中取出独立安装即可，安装尺寸如下图：

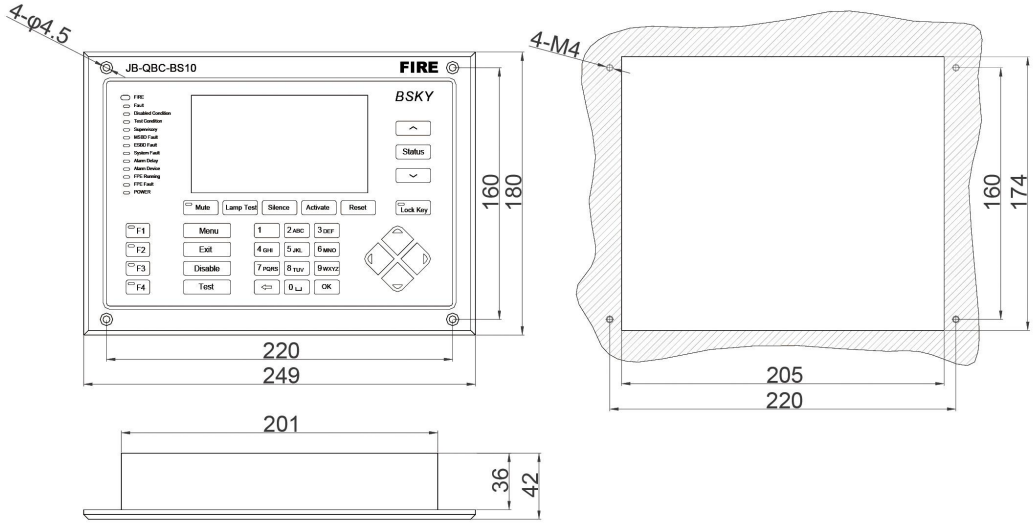

嵌入式安装型式

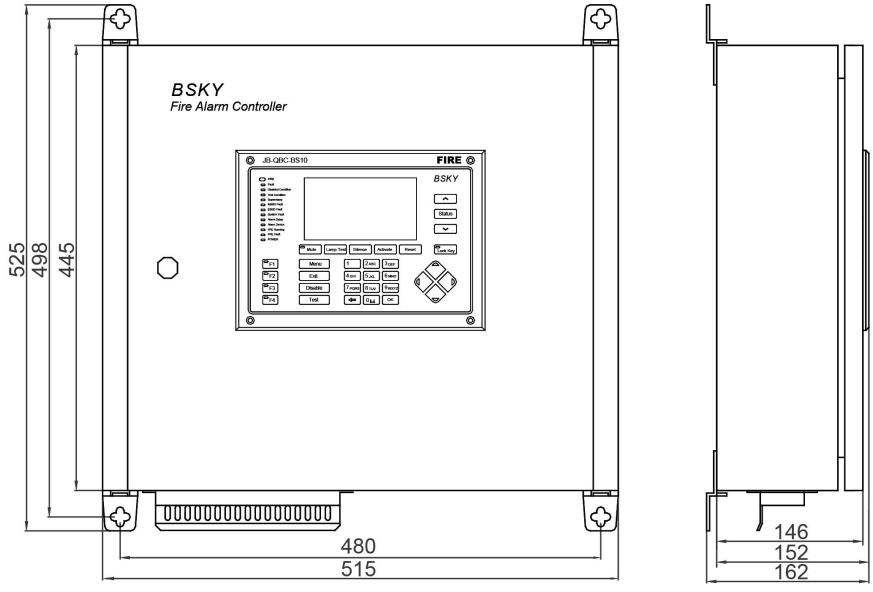

壁挂式安装型式

1.3 技术参数

主电*	AC 110/220V（+10%~-15%），50HZ/60HZ
应急电源*	AC 110/220V（+10%~-15%），50HZ/60HZ
船用直流备电	DC 24V（+30%~-25%）
内部蓄电池	DC 24V，2.2AH
功耗	监视状态：≤10W；报警状态：≤12W
执行标准	EN54/2，4
回路板数目	最多 2 个
每块回路板的容量	4 个环形回路，每个回路可以接最多 128 个报警点
手动火灾报警按钮的报警时	≤5 秒
探测器的报警时	≤10 秒
回路线路长度	≤1500 米
控制器与火灾显示盘之间的线路长度	≤1500 米
布线方式	1、 BS10 系列报警点 - 2 线制，无极性 2、 BS10 系列模块 - 4 线制,有极性
控制器输出触点	**无源触点输出，触点容量为 1A，DC30V：** 火警输出 6 组(FIRE1~FIRE6) 火警延时输出 1 组(BELL2) PA 输出 1 组 故障输出 4 组(FAULT1~FAULT4) 电源故障输出 2 组(POW.FAU1/POW.FAU2) 系统故障输出 2 组(SYS.FAU1/SYS.FAU2) **有源输出，输出电压 DC24V，最大电流 1A：** 火警延时输出 1 组(BELL1) 门吸输出 1 组(DOOR.)
无源输入触点 2 组	IN1/IN2
火警历史记录	最多 999 条
其它历史记录(包括上电，故障，联动等等)：	最多 999 条
安装方式	壁挂式/嵌入式
工作温度	5℃~55℃
工作湿度	≤95%
控制器尺寸	515×525×146（高×宽×厚）mm
重量	约 22 千克
机箱防护等级	IP44

***备注：如果主电和应急电源的输入为 AC110V，请将开关电源的开关切换至 AC110V**

1.4 火灾报警控制器内部布置图及接线端子示例

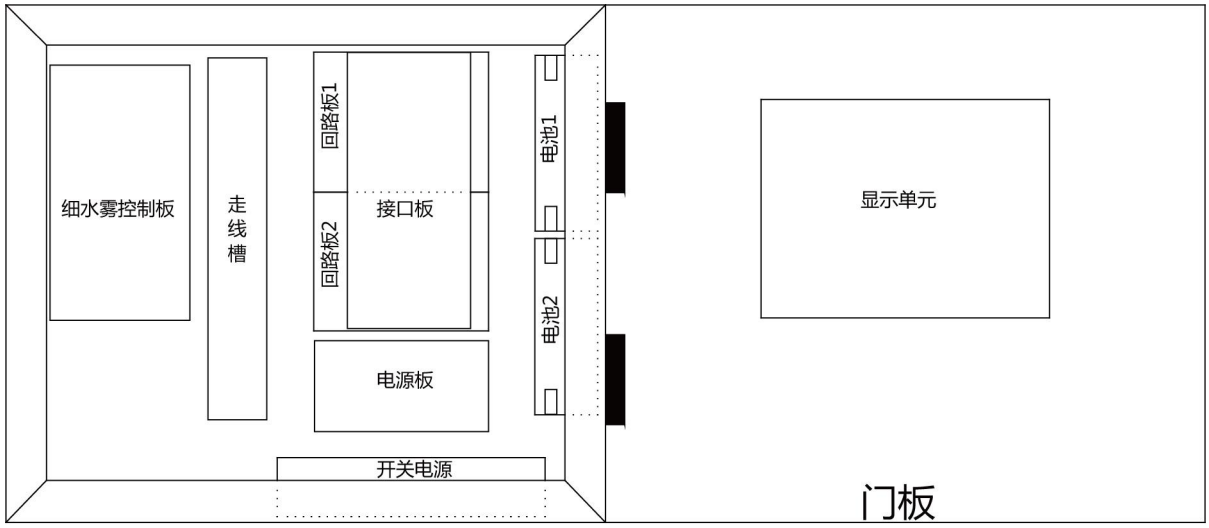

接口板

与火灾显示盘通讯	RS485. 1		24V	1
			GND	2
			A11	3
			B11	4
	RS485. 2		24V	5
			GND	6
			A12	7
			B12	8
输出至 VDR	RS485		A21	9
			B21	10
			GND	11
	RS232		TXD	12
			RXD	13
			GND	14
外部输入接口	GA(IN)		C	15
			NO	16
	IN1		C	17
			NO	18
	PA(IN)		C	19
			NO	20
	IN2		C	21
			NO	22
故障输出	一般故障输出	1	C	23
			NO	24
			NC	25
		2	C	26
			NO	27
			NC	28
		3	C	35
			NO	36
			NC	37
		4	C	38
			NO	39
			NC	40
	电源故障输出	1	C	32
			NO	33
			NC	34
		2	C	44
			NO	45
			NC	46
	系统故障输出	1	C	29
			NO	30
			NC	31
		2	C	41
			NO	42
			NC	43
火警输出	一般火警输出	1	C	47
			NO	48
			NC	49
		2	C	50
			NO	51
			NC	52
		3	C	53
			NO	54
			NC	55
		4	C	60
			NO	61
			NC	62
		5	C	63
			NO	64
			NC	65
		6	C	66
			NO	67
			NC	68
	火警延时输出	1	+	56
			−	57
		2	C	69
			NO	70
	PA(OUT)		C	58
			NO	59
	DOOR.		MD+	71
			MD−	72
EX. DC24V INPUT			−	73
			+	74

回路板

LOOP1	IN	T11+	1
		T11−	2
	OUT	T12+	3
		T12−	4
LOOP2	IN	T21+	5
		T21−	6
	OUT	T22+	7
		T22−	8
LOOP3	IN	T31+	9
		T31−	10
	OUT	T32+	11
		T32−	12
LOOP4	IN	T41+	13
		T41−	14
	OUT	T42+	15
		T42−	16

电源板

DC24V OUT	24V	1
	GND	2
SHIP' S DC24V	P1(24V)	3
	N1(GND)	4
接地线	GROUND	5
ESBD 110/220VAC	R1	6
	T1	7
MSBD 110/220VAC	R2	8
	T2	9
110/220VAC OUT	R3	10
	T3	11

细水雾扩展板

细水雾区域控制输出	1		C	1
			NO	2
			NC	3
	2		C	4
			NO	5
			NC	6
	3		C	7
			NO	8
			NC	9
	4		C	10
			NO	11
			NC	12
	5		C	13
			NO	14
			NC	15
	6		C	16
			NO	17
			NC	18
	7		C	19
			NO	20
			NC	21
	8		C	22
			NO	23
			NC	24
	9		C	25
			NO	26
			NC	27
	10		C	28
			NO	29
			NC	30
外部输入	CPE		C	31
			NO	32
	FPE		C	33
			NO	34
控制器内部连线	IN		24V	35
			GND	36
			T1+	37
			T1−	38
	OUT		24V	39
			GND	40
			T2+	41
			T2−	42

显示单元

与接口板或火灾显示盘通讯	1	IN	24V	1
			GND	2
			A11	3
			B11	4
		OUT	24V	5
			GND	6
			A12	7
			B12	8
	2	IN	24V	9
			GND	10
			A21	11
			B21	12
		OUT	24V	13
			GND	14
			A22	15
			B22	16
BUS			T+	17
			T−	18
USB1				
USB2				

1.5 回路板与报警点之间的布线图

下图中回路总线采用的电缆为屏蔽电缆，屏蔽层（GROUND）终端一点接地。

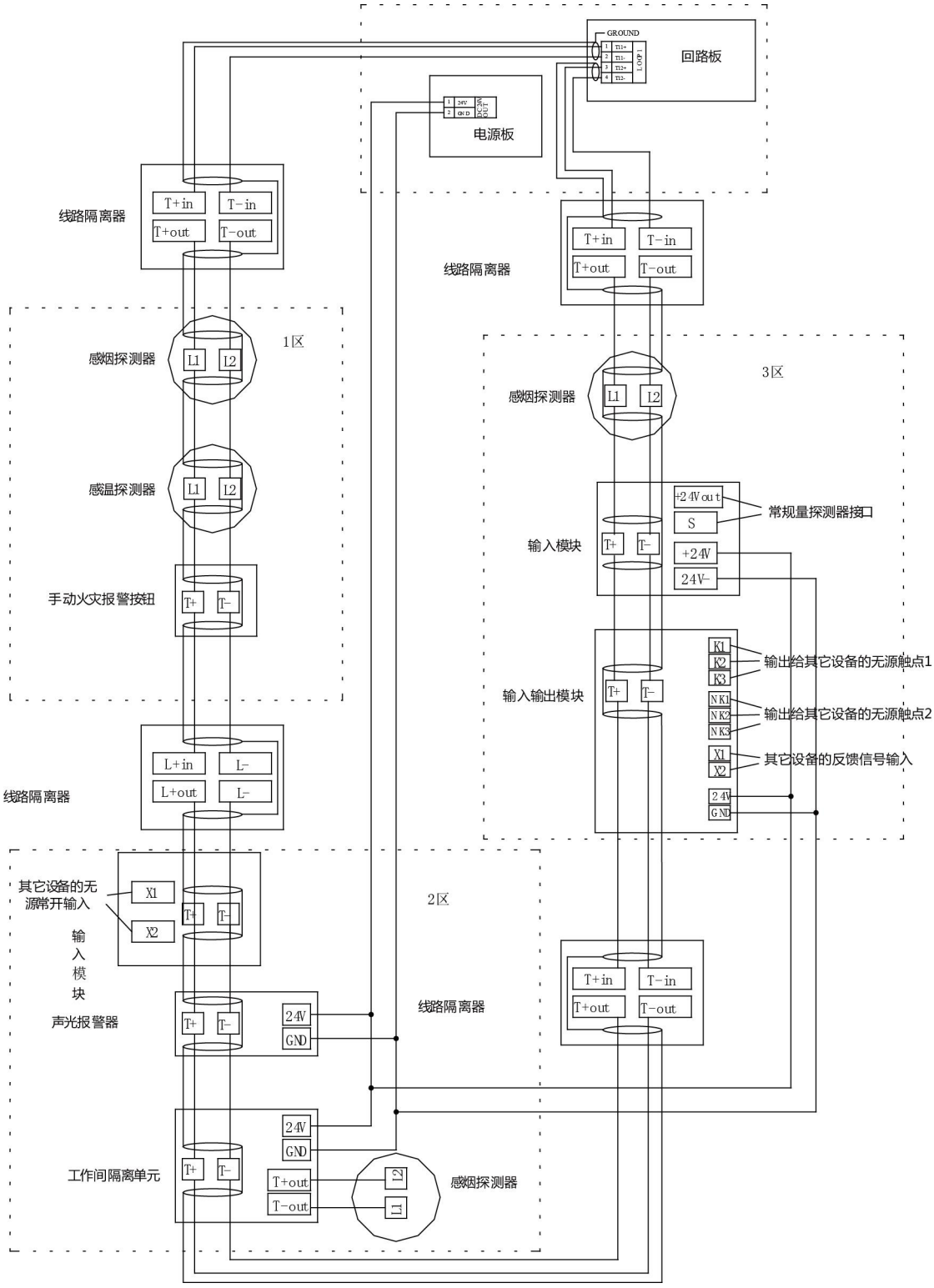

1.6 电缆

系统中所用电缆非常重要，系统中所有连接到接线端子的电缆终端必须加接线帽，确保线帽与电缆尺寸相配，防止线之间短路。尽量避免一个接线端子接多股线。如果确实需接多股线，用一个接线帽将多股线压在一起，不要使用胶带。

电缆的选择：
系统中，根据电缆用途不同，必须使用不同的电缆。回路线与电源线采用不一样的电缆，下表中列出的电缆均为最小尺寸。

电缆用途	电缆类型
AC220V 电源	1.5mm^2
DC24V 电源输入	2.5mm^2
接地线	6.0mm^2
通迅用电缆	4*1.5 mm^2 屏蔽电缆
回路用电缆	2*1.5 mm^{2}屏蔽电缆
多股电缆	1.5mm^{2}屏蔽电缆

***注意！所有的回路线及通迅线必须屏蔽，屏蔽层终端需接地**

2 JB-QBC-BS10R 型火灾显示盘

2.1 概述

火灾显示盘用于显示系统中的所有报警信息，包括火警，故障，隔离，测试，监管等。

火灾显示盘只能用于显示报警信息，可以通过手动查询所有报警信息，及消除火灾显示盘的报警声音。

2.2 技术参数

电源	DC 24V±10%
功耗	监视状态：≤1.5W；报警状态：≤2.4W
火灾报警控制器与火灾显示盘之间的通迅线距离	≤1500 米
电缆	电源线和信号线均采用大于 1.5mm^{2}的屏蔽线
安装方式	壁挂式/嵌入式
工作温度	5℃~55℃
相对湿度	≤95%
尺寸	245×176×102（高×宽×厚）mm
重量	约 2.2 千克
防护等级	IP44

2.3 火灾显示盘的安装尺寸

火灾显示盘前面板的安装尺寸与火灾报警控制器前面板的安装尺寸相同，壁挂式安装尺寸如下图：

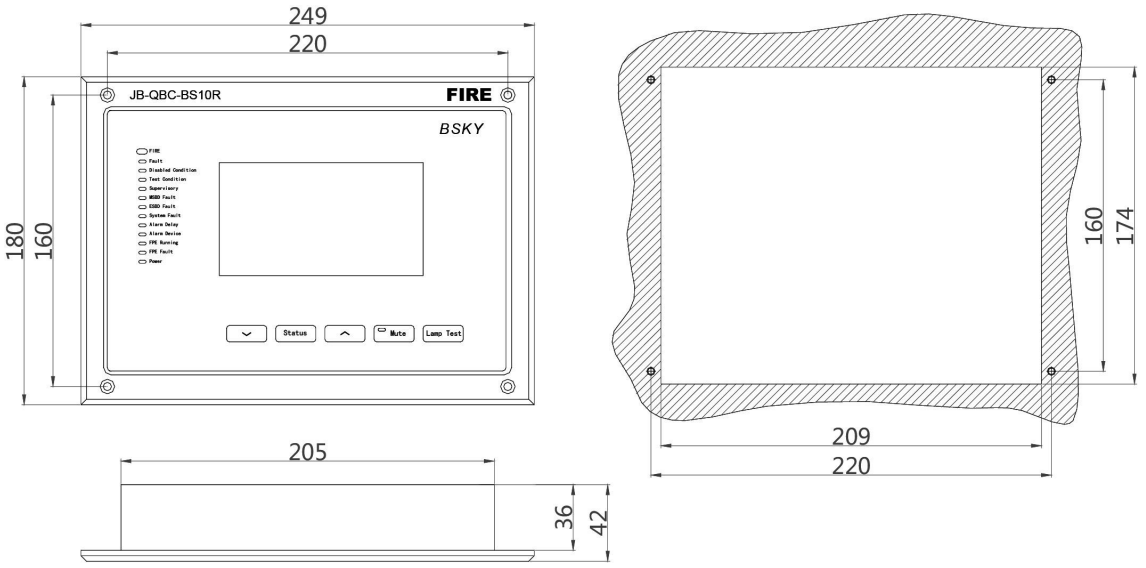

嵌入式安装型式

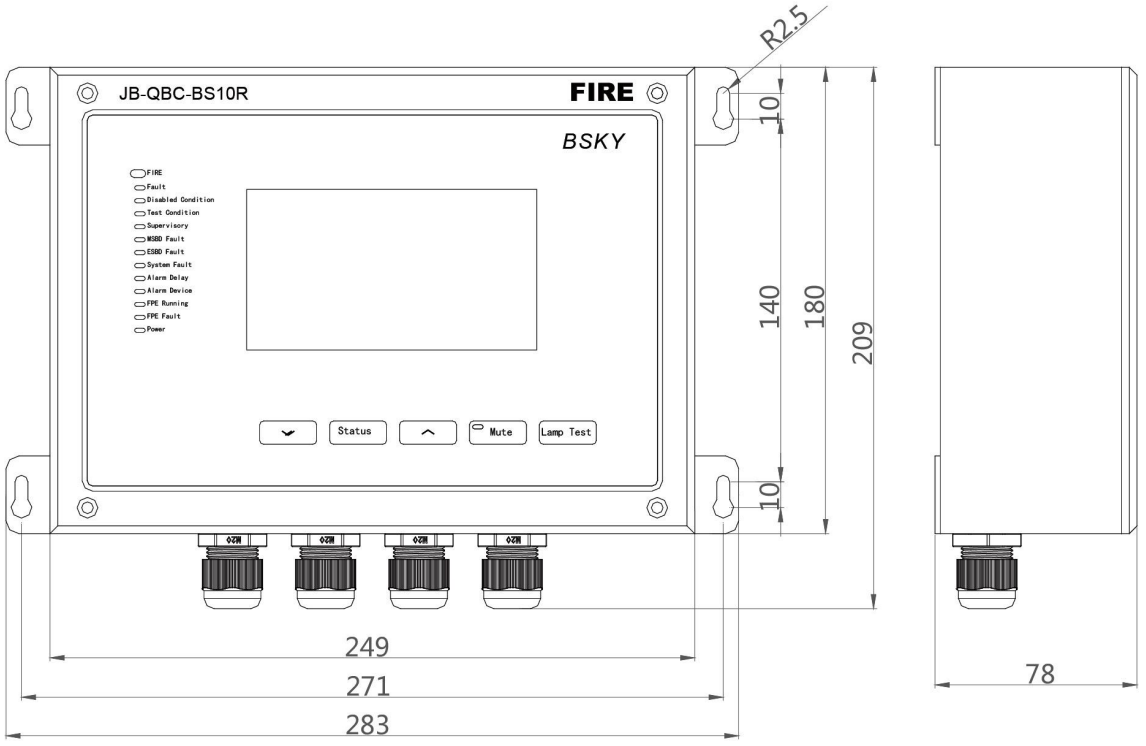

壁挂式安装型式

2.4 火灾显示盘的接线端子图

火灾显示盘	与火灾报警控制器通讯	1	IN	24V	1
				GND	2
				A11	3
				B11	4
			OUT	24V	5
				GND	6
				A12	7
				B12	8
		2	IN	24V	9
				GND	10
				A21	11
				B21	12
			OUT	24V	13
				GND	14
				A22	15
				B22	16

2.5 连线图示意

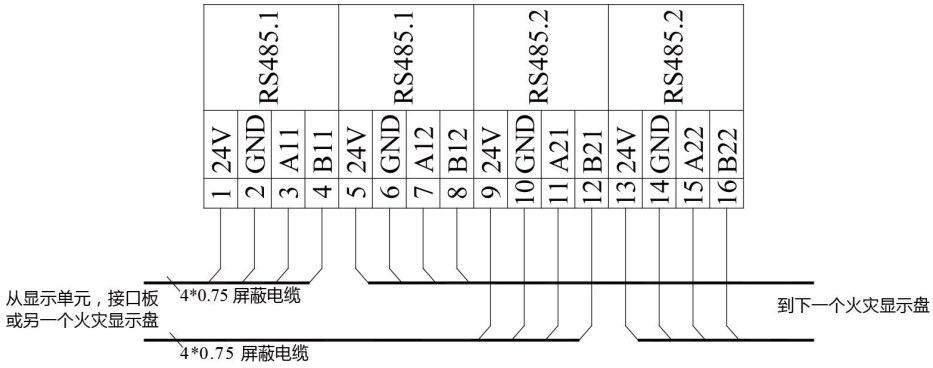

3 JTY-GD-BS10 型点型光电感烟火灾探测器

3.1 特性

- 带地址码
- 具有自适应和自学习功能
- 抗环境干扰能力强
- 内置热敏电阻用于监视环境温度
- 内置报警用的发光二极管
- 抗电磁干扰
- 设计满足主要船级社的要求

3.2 应用

JTY-GD-BS10 型点型光电感烟火灾探测器用于检测空气中的烟密度,当烟密度超过规定的门限时,给出报警。感烟探测器内热敏电阻,用于补偿感烟探测器的灵敏度.。此感烟探测器可以用 JB-QBC-BS10 型固定式探火和失火报警系统。

当需要更高的防护等级时,此光电感烟探测器需安装在有两个填料函的探测器防水底座上。

本光电感烟探测器适用于大多数会产生可见烟雾的场合,例如：卧室，走廊，电控室，办公室等处。

3.3 探测原理

通过光的散射来探测空气中的烟密度。

3.4 技术参数

工作电压		DC 18~26V
功耗	静态	≤ 0.35mA
	报警状态	≤ 1.5mA
	给外部指示灯提供的电流	≤ 1.2mA
执行标准		EN-54/7
材料		ABS
颜色		白灰
工作温度		-25℃~+70℃
相对湿度（无冷凝）		≤95%
尺寸		Φ100×38 mm
含底座重量		约 126 克
防护等级		IP 44（含防水底座）

3.5 尺寸图

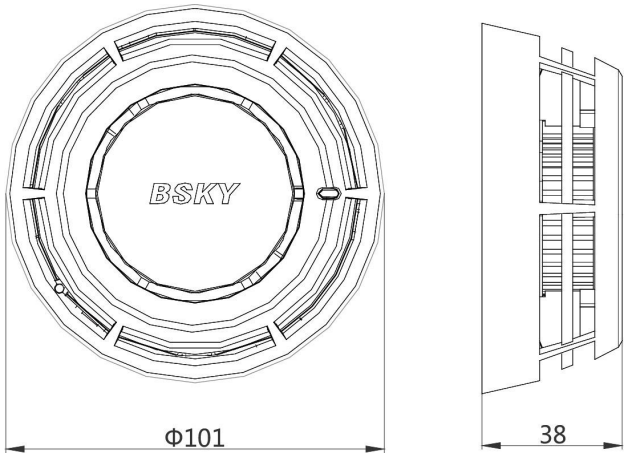

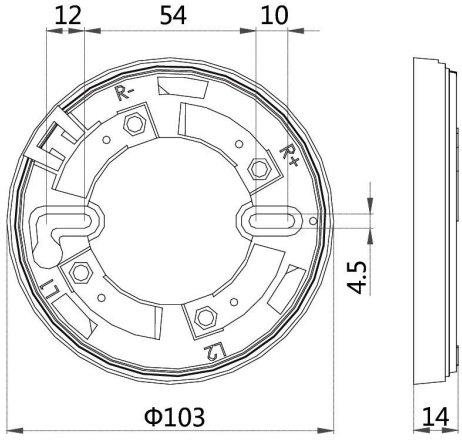

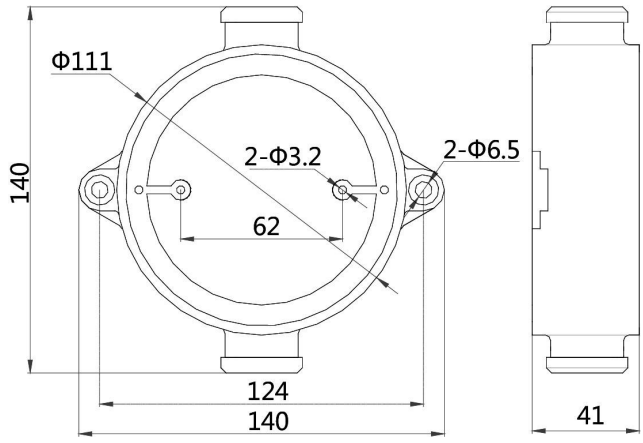

DB-BS10 型探测器底座	DBF-BS10 型探测器防水底座

3.6 连接线

L1：回路中的线路 1，无极性。

L2：回路中的线路 2，无极性。

当需要连接远程指示灯时，将其连接在 DB-BS10 底座上的 R+/R-端子上，如下图：

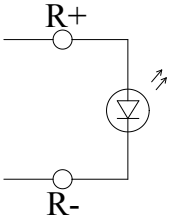

4 JTW-ZD-BS10 型点型感温火灾探测器

4.1 特性

- 内置感温头
- 内置报警用的发光二极管
- 本探测器设计为满足 A2 等级
- 抗环境干扰和电磁干扰能力强
- 设计满足主要船级社的要求

4.2 应用

JTW-ZD-BS10 型点型感温火灾探测器用于探测火灾发生时环境温度的升高，此感温探测器可以用 JB-QBC-BS10 型固定式探火和失火报警系统，当需要更高的防护等级时,此感温探测器需安装在有两个填料函的探测器防水底座上。防护等级可达 IP44。

本感温探测器一般用于感烟探测器不易探测或容易引起误报的场合，例如：厨房，洗澡间，锅炉房等处。

4.3 探测原理

通过使用探测器上的热敏电阻测量环境温度，报警温度参考下表 1

探测器分类	典型应用温度	最高温度	最小静态响应温度	最大静态响应温度
A2	25	50	54	70

4.4 技术参数

工作电压		DC 18~26V
功耗	静态 报警状态 给外部指示灯提供的电流	≤ 0.35mA ≤ 1.5mA ≤ 1.2mA
执行标准		EN54/5
材料		ABS
颜色		白灰
最大应用范围		参考表 1
工作温度		-25℃~+70℃
相对湿度（无冷凝）		≤95%
尺寸		Φ100×38 mm
重量		约 110 克
防护等级		IP 44 （含防水底座）

4.5 尺寸图

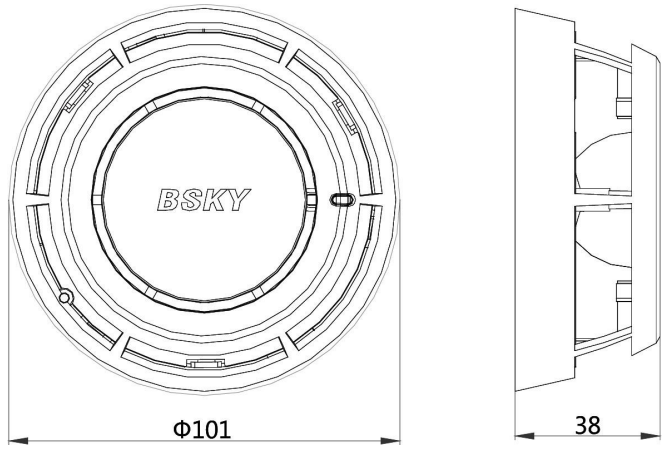

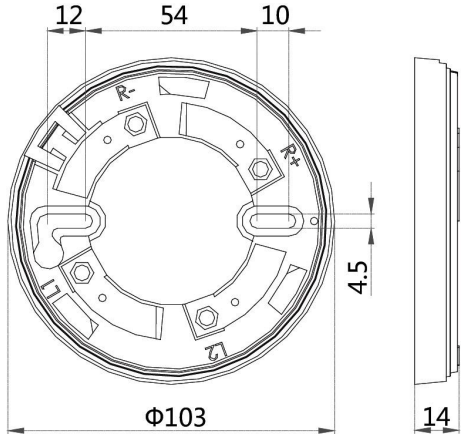

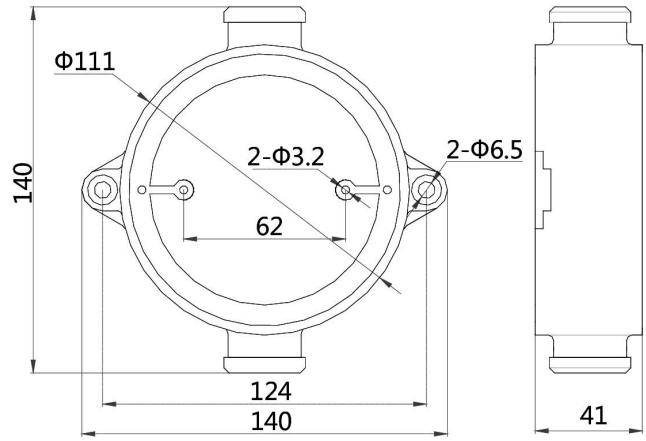

DB-BS10 型探测器底座　　DBF-BS10 型探测器防水底座

4.6 连接线

L1：　回路中的线路 1，无极性。

L2：　回路中的线路 2，无极性。

当需要连接远程指示灯时，将其连接在 DB-BS10 底座上的 R+/R-端子上，如下图：

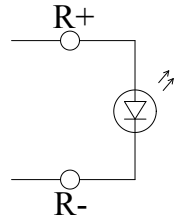

5 J-SAP-BS10 型手动火灾报警按钮

5.1 特性

- 带地址码
- 最大 3 秒响应时间
- 手报内置发光二极管指示
- 可以用专用钥匙进行功能测试
- 成熟技术
- 设计满足主要船级社的要求

5.2 应用

J-SAP-BS10 手动火灾报警按钮适用于室内环境,此手报可以用 JB-QBC-BS10 型固定式探火和失火报警系统。

5.3 工作原理

报警：按下手报面板的中心,释放报警开关,面板上将有一条黄色带状显示，表明面板已经动作。

复位：使有附件中和钥匙插入手报底部的孔内,然后快速拔出钥匙,相连支架将会被拉下来,然后将支架上推到底。

5.4 技术参数

工作电压		DC 18~26V
功耗	静态	≤0.3mA
	报警状态	≤1.5mA
执行标准		EN54/11
材料		ABS
颜色		红
工作温度		-25℃~+70℃
相对湿度（无冷凝）		≤95%
尺寸		88×88×24 mm
重量		约 100 克
防护等级		IP 22

5.6 连线图

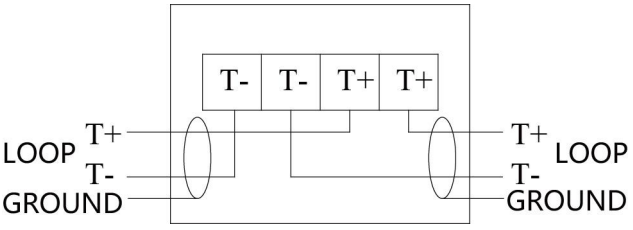

5.5 尺寸图

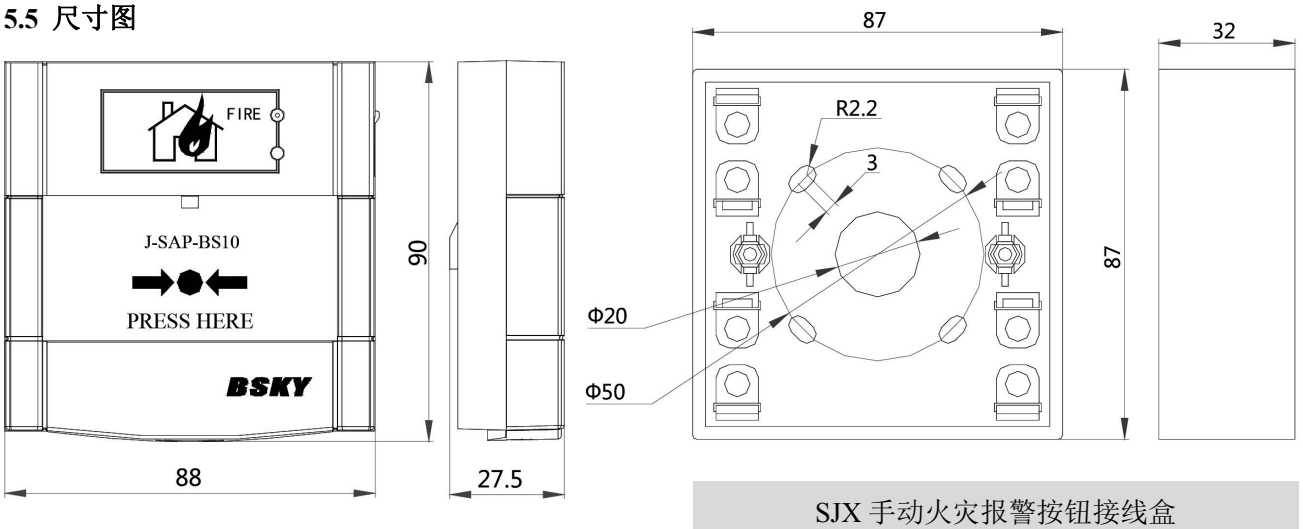

SJX 手动火灾报警按钮接线盒

6 J-SAP-BS10WP 型手动火灾报警按钮（防水型）

6.1 特性

- 带地址码
- 最大 3 秒响应时间
- 手报内置发光二极管指示
- 可以用专用钥匙进行功能测试
- 成熟技术
- 设计满足主要船级社的要求

6.2 应用

J-SAP-BS10WP 型手动火灾报警按钮（防水型）适用于室外环境，此手报可以用 JB-QBC-BS10 型固定式探火和失火报警系统。

6.3 工作原理

报警：按下手报面板的中心,释放报警开关,面板上将有一条黄色带状显示，表明面板已经动作。

复位：使有附件中和钥匙插入手报底部的孔内，然后快速拔出钥匙，相连支架将会被拉下来,然后将支架上推到底。

6.4 技术参数

工作电压：		DC 18~26V
功耗	静态	≤0.3mA
	报警状态	≤1.5mA
执行标准		EN54/11
材料		ABS
颜色		红
工作温度		-25℃~+70℃
相对湿度（无冷凝）		≤95%
尺寸		130×128×83mm
重量		约 300 克
防护等级		IP 44

6.5 尺寸图

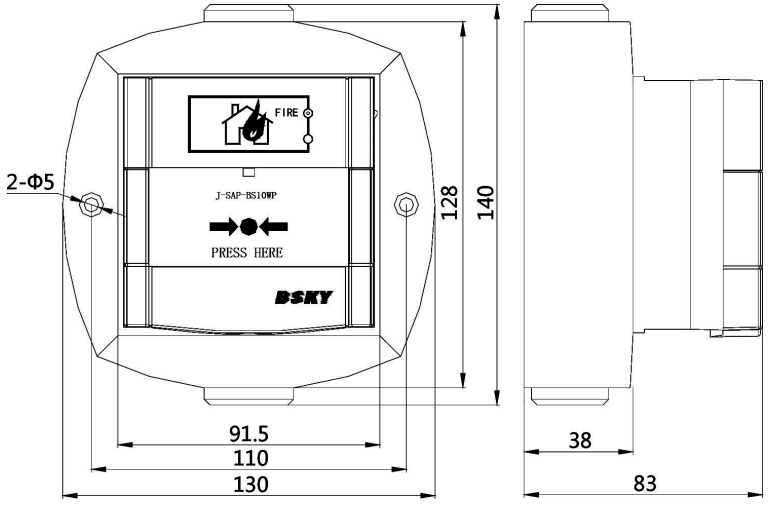

6.6 连线图

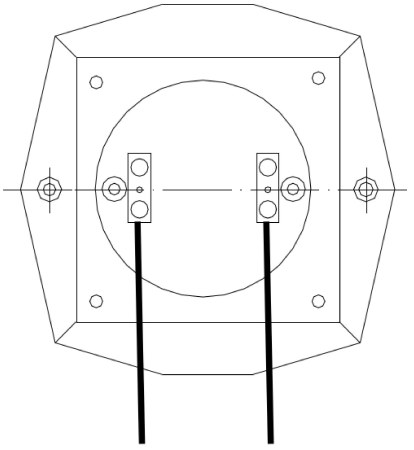

T+/T-的位置如上图，总线无极性

7 DI-BS10 型工作间隔离单元

7.1 特性

- 屏蔽探测的区域
- 面板上有两个按钮：隔离/恢复分区
- 一个连接至分区的输出回路
- 带地址码
- 用 DC24V 供电

7.2 应用

DI-BS10 型工作间隔离单元用于隔离和恢复连接在其后的分区中的探测器，单元上有一个绿色电源指示灯用于指示电源工作状态，按下隔离键后， 黄色的隔离指示灯点亮表明所接的分区正处于隔离状态，当按下恢复键后，隔离指示灯灭掉，所接的分区从隔离状态恢复到正常工作状态。

7.3 技术参数

工作电压		DC18V~26V
功耗	静态	回路：≤0.38mA；DC24V：≤1.2mA
	报警状态	回路：≤1.5mA；DC24V：≤10.0mA
材料		ABS
颜色		白灰
指示灯		DC24V 电源指示灯 绿色 隔离指示灯 黄色
工作温度		-25℃~+70℃
相对温度（无冷凝）		≤95%
尺寸		239×120×68 mm
重量		约 625 克
防护等级		IP 44

7.4 尺寸图

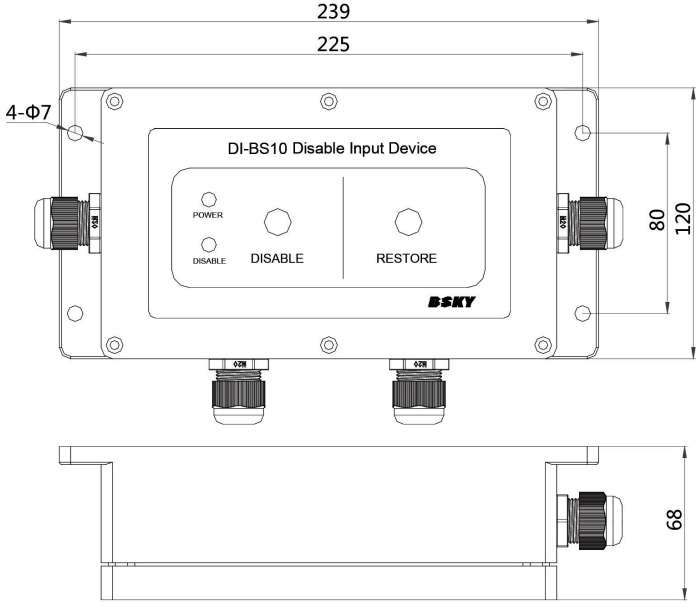

7.5 连线图

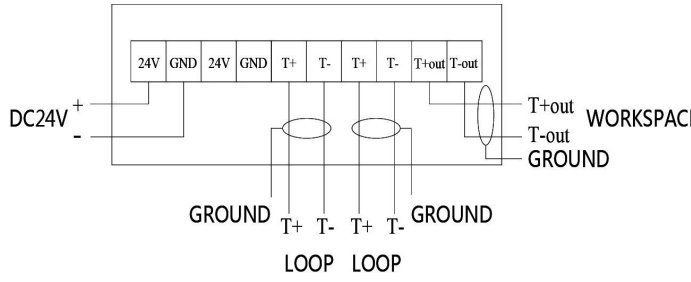

备注：

- 在用地址编码器读写时，需将跳线 JP1 短路。
- 正常使用时，如果将跳线 JP1 短路,本单元将不监视连接至 24V/GND 端子的线路是否断线。

8 LIC-BS10 型线路隔离器

8.1 特性

- 将发生短路故障的回路从线路上断开。
- 当故障消失后自动复位
- 内置黄色指示灯
- 从回路上取电

8.2 应用

LIC-BS10 型线路隔离器用于保护回路，如果回路的线路发生短路时，线路隔离器将会动作，将发生短路的线路从回路上断开，以保护回路的其它部分正常工作，线路隔离器没有地址码。

当线路隔离器动作时，点亮黄色指示灯。

此线路隔离器可以与探测器的底座装在一起，也就是将线路隔离器的上盖去掉，将 DB-BS10 型探测器底座固定在上面，此底座就变为带隔离器的底座。

8.3 技术参数

工作电压		DC 18~26V
功耗	静态	≤ 0.78mA
	报警状态	≤ 4.6mA
材料		ABS
颜色		白灰
工作环境		EN-54/7
工作温度		-25℃~+70℃
相对温度（无冷凝）		≤95%
尺寸		Φ105×43 mm
重量		约 129 克
防护等级		IP 44（含防水底座）

8.5 连线图

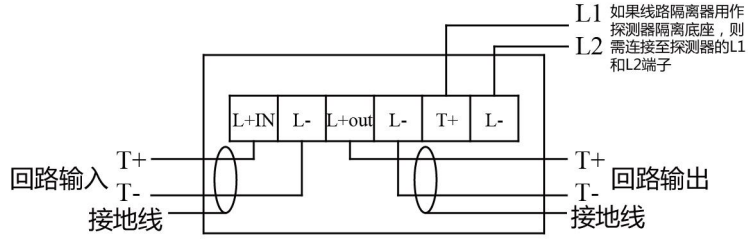

8.4 尺寸图

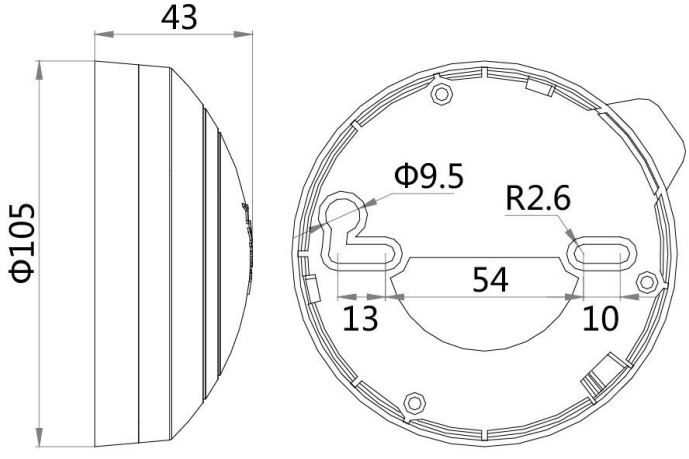

9 IMC-BS10 型输入模块

9.1 特性

- 带地址码
- 可配置输入方式
- 有几种输入模式可供选择：外部开关量输入，常规量探测器和红外探测器。
- 监视线路断线
- 设计满足主要船级社的要求

9.2 应用

IMC-BS10 型输入模块用于将不同类型的设备连接至 BS10 系统，包括下列类型的设备：外部开关量输入，常规量探测器和红外探测器。

9.3 工作原理

监视输入信号，正常状态下，外部端子短路给出报警，监视线路断线故障。

9.4 技术参数

工作电压：		DC 18~26V
功耗	静态	回路：≤0.5mA DC24V：≥6.5mA；≤18mA
	报警状态	回路：≤1.5mA DC24V：≥20mA；≤45mA
材料		ABS
颜色		白灰
输入模式		可配置
工作温度		-25℃~+70℃
相对温度（无冷凝）		≤95%
尺寸		239×120×68 mm
重量		约 632 克
防护等级		IP 44

9.5 尺寸图

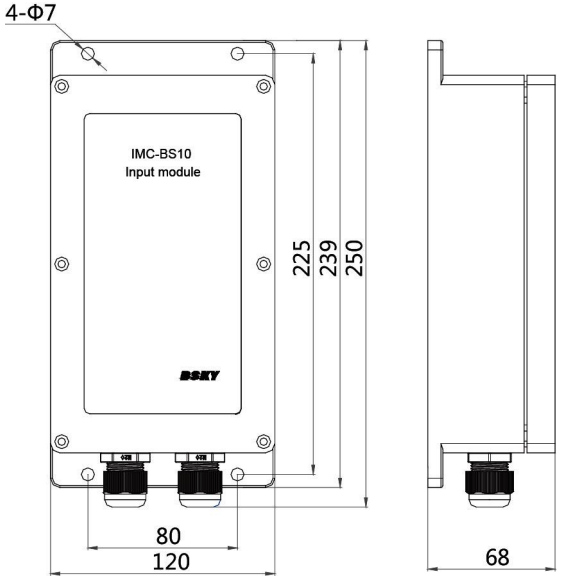

9.6 连接图

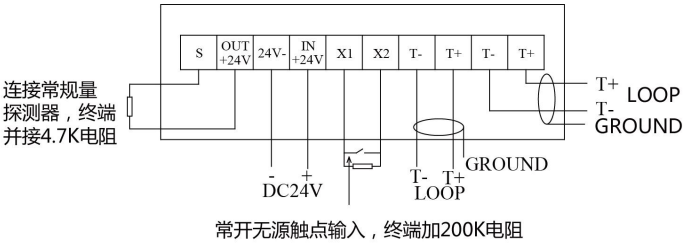

备注：

- 在用地址编码器读写时，需将跳线 JP1 和 JP2 短路。
- 正常使用时，如果将跳线 JP1 短路,本单元将不监视连至 S/out +24V 和 in+24V/24-端子的线路是否断线。
- 正常使用时，如果将跳线 JP2 单元将不监视连接至 X1/X2 端子的线路是否断线。

10 RMC-BS10 型输入输出模块

10.1 特性

- 带地址码
- 提供 2 组无源触点
- 技术成熟
- 设计满足主要船级社的要求

10.2 应用

RMC-BS10 型输入输出模块可以通过无源触点 NO/C/NC 控制外部设备。

10.3 技术参数

工作电压		DC 18~26V
功耗	静态	≤0.38mA
	报警状态	≤2.60mA
材料		ABS
颜色		白灰
输出		2 组无源触点
输出触点容量		最大 2A - 30V DC
工作温度		-25℃~+70℃
相对温度（无冷凝）		≤95%
尺寸		239×120×68 mm
重量		约 675 克
防护等级		IP 44

10.5 连线图

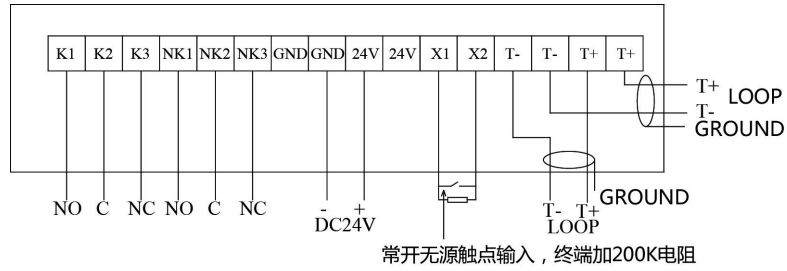

10.4 尺寸图

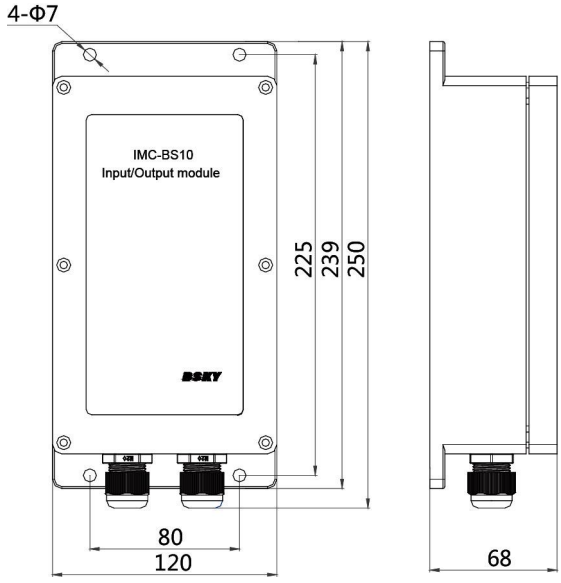

备注：

- 模块可以监视连接在端子 K1(NO)/ K2(C)上线路的状态。为了启用这个功能需将 24V+连接至 K1，将输出线连接至 K2，24V- 是公共端，终端电阻小于 10K。
- 在使用编码器读写本模块时，需短路跳线 JP1, JP2 和 JP3。
- 短路跳线 JP1, 模块不监视端子 X1/X2 上的线路断线。
- 短路跳线 JP2, 模块不监视端子 24V+/24V-上的线路断线
- 短路跳线 JP3, 模块不监视端子 K1/K2 的线路断线

11 JTG-IR-BS10 型点型红外火焰探测器

11.1 特性

- 可以与 IMC-BS10 型输入模块接口
- DC24V 供电
- 防护等级高
- 灵敏度高
- 抗干扰能力强

11.2 应用

红外火焰探测器可以抗太阳光，人造光，热辐射及电磁干扰等等。

此探测器是防水型的，可用于工业场合，此探测器可以通过 IMC-BS10 型输入模块连接至 BS10 系统。一般情况下，此火焰探测器用于探测火焰（木材，塑料，酒精，油，气等等的燃烧）。

11.3 技术参数

工作电压		DC18V~30V
功耗	静态	≤25mA
	报警状态	≤35mA
执行标准		EN54/10
材料		铝
颜色		银色
指示		延时期间：绿色常亮 正常工作状态：绿色闪亮 报警状态：红色常亮
上电延时时间		30 秒
继电器触点容量		2A， DC30V
最大探测距离		25 米
视角		90 度
工作温度		-25℃~+70℃
相对温度（无冷凝）		≤95%
尺寸		124×118×122 mm
重量		约 1.9 千克
防护等级		IP 44

11.5 连线图

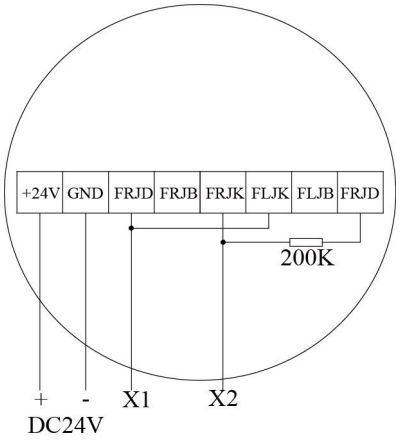

红外火焰探测器通过 IMC-BS10 型输入模块接入 BS10 系统。

备注：

- FRJD / FRJB/ FRJK: 火警继电器输出，无源触点，FRJD->公共端，FRJB->常闭端，FRJK->常开端。
- FLJD / FLJB/ FLJK: 故障继电器输出，无源触点，FLJD->公共端，FLJB->常闭端，FLJK->常开端。

11.4 尺寸图

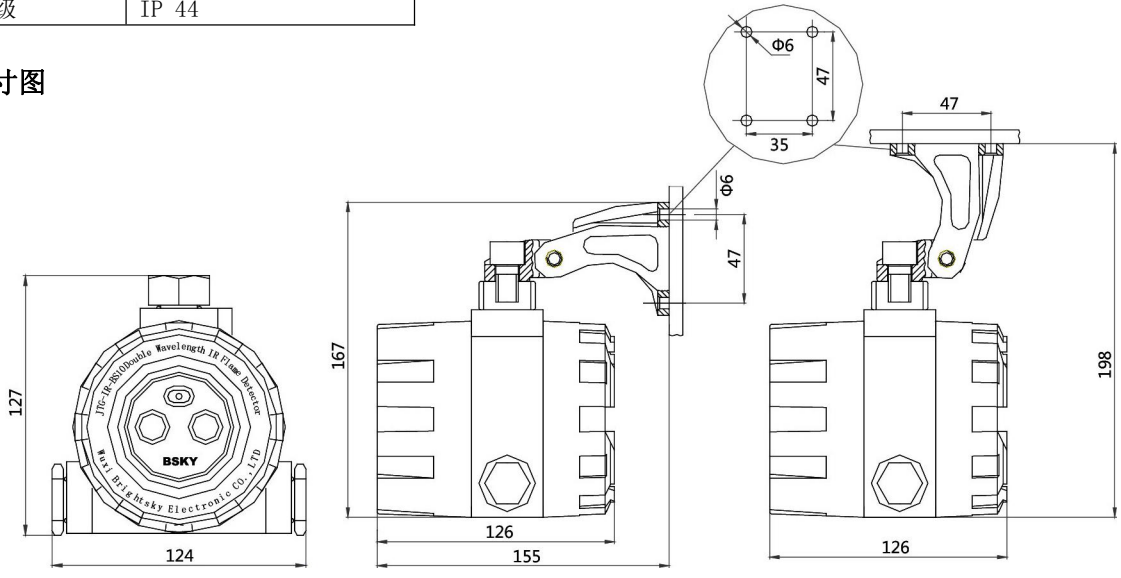

12 SMC-BS10 型火灾声光警报器

12.1 特性

- 带地址码
- 可发出高亮度光
- 防护等级高

12.2 应用

SMC-BS10 型火灾声光警报器主要通过声音和光提醒现场人员。此火灾声光警报器可由 JB-QBC-BS10 火灾报警控制器启动和停止。

12.3 技术参数

工作电压		DC 18V~26V
功耗	静态	回路：≤0.42mA， DC24V：≤6.5mA
	报警状态	回路：≤1.5mA， DC24V：≤300mA
执行标准		EN54-3
材料		ABS
颜色		红
声压级		≥90db
工作温度		-25℃~+70℃
相对温度（无冷凝）		≤95%
尺寸		239×120×92mm
重量		约 780 克
防护等级		IP 44

12.4 尺寸图

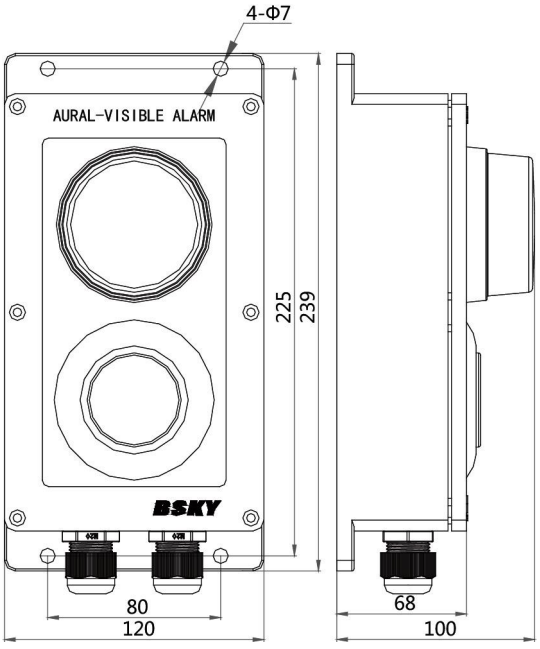

12.5 连线图

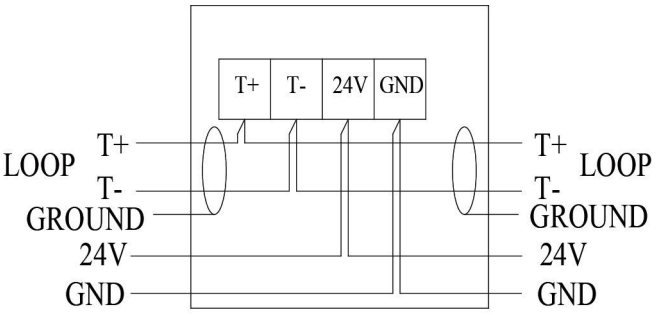

13 LB5i 型现场控制盒

13.1 特性

- 带地址码
- 集成 2 个输入模块 1 个输出/输出模块
- 防护等级高

13.2 应用

LB5i 型现场控制盒主要是用作灭火启动现场的启动及停止功能。此现场控制盒发出的启停信号通过 JB-QBC-BS10 火灾报警控制器执行相应的联动操作。

13.3 技术参数

工作电压		DC 18V~26V
功耗	静态	回路：≤1.5 mA DC24V：≥6.5mA；≤18mA
	报警状态	回路：≤1.5 mA DC24V：≥20mA；≤45mA
材料		ABS
颜色		白灰
工作温度		-25℃~+70℃
相对温度（无冷凝）		≤95%
尺寸		239×120×68 mm
重量		约 680 克
防护等级		IP 44

13.4 尺寸图

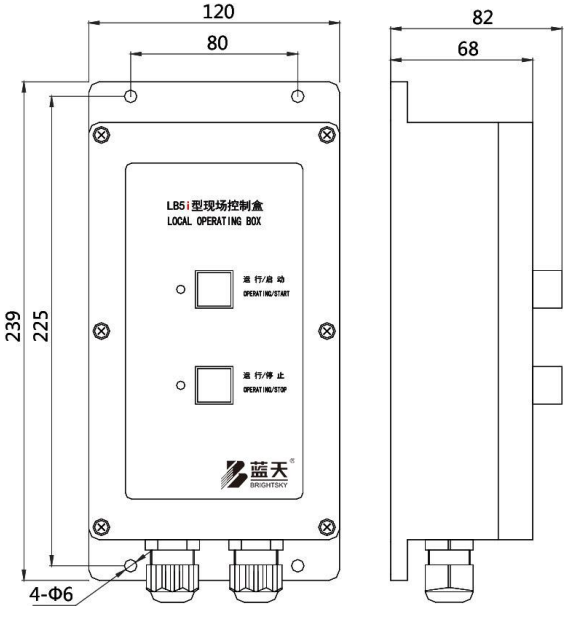

13.5 连线图

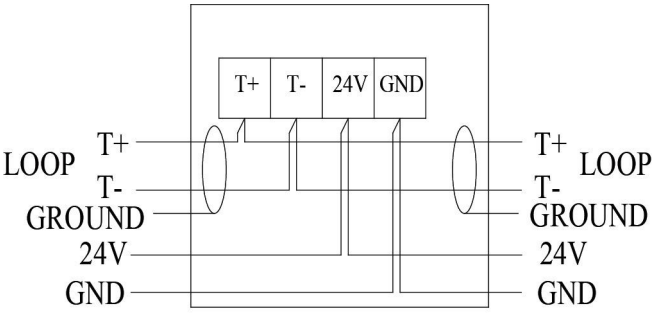

14 JTG-ZW-5i 型点型紫外火焰探测器

14.1 特性

- 带地址码
- 抗干扰能力强
- 防护等级高
- 灵敏度高
- 设计满足主要船级社的要求

14.2 应用

点型紫外火焰探测器抗干扰能力强，可用于工业场合，此探测器可以直接连接至 BS10 系统.一般情况下，此火焰探测器用于探测火焰（木材，塑料，酒精，油，气等等的燃烧）。

14.3 技术参数

工作电压		DC 18~26V
功耗	静态	≤500uA
	报警状态	≤2mA
执行标准		EN54/10
材料		ABS
颜色		白灰
指示灯		红色 正常时闪亮、报警时常亮
最大探测距离		25 米
视角		90 度
工作温度		-25℃~+70℃
相对温度（无冷凝）		≤95%
尺寸		Φ104×40 mm
重量		约 200 克
防护等级		IP 44(含防水底座)

14.4 尺寸图

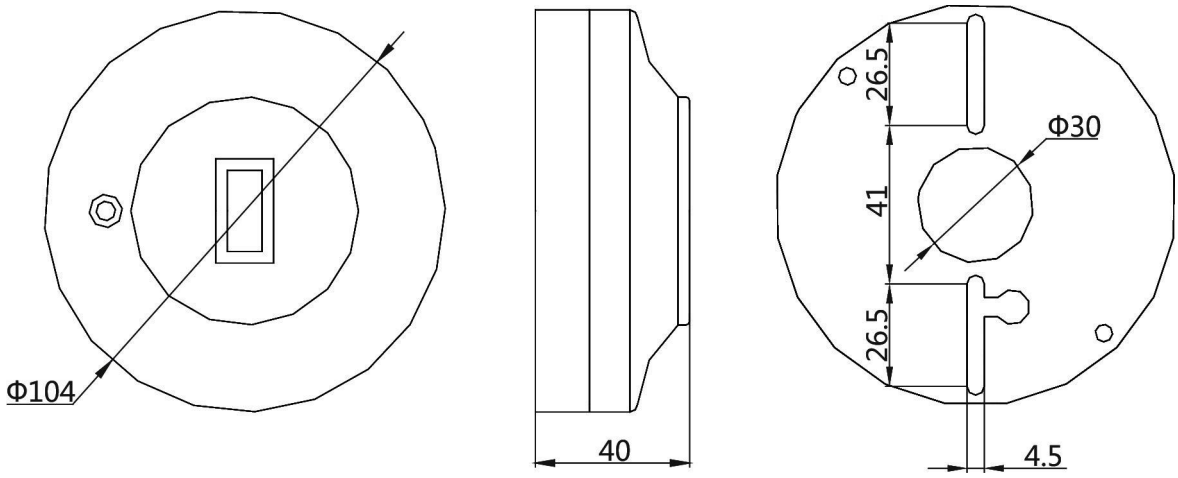

14.5 连线图

L1: 回路中的线路 1，无极性。

L2: 回路中的线路 2，无极性。

15 JTG-ZW-5Ei 型点型紫外火焰探测器

15.1 特性

- 带地址码
- DC24V 供电
- 防护等级高
- 灵敏度高
- 抗干扰能力强

15.2 应用

点型紫外火焰探测器抗干扰能力强，防水型，可用于工业场合，此探测器可以直接连接至 BS10 系统。

一般情况下，此火焰探测器用于探测火焰（木材，塑料，酒精，油，气等等的燃烧）。

15.3 技术参数

工作电压	DC 18～26V
功耗 静态 报警状态	 回路：≤1.5 mA ；DC24V：≥6.5mA；≤18mA 回路：≤1.5 mA ；DC24V：≥20mA； ≤45mA
执行标准	EN54/10
材料	铝
颜色	银色
指示灯	红色 正常时闪亮、报警时常亮
上电延时时间	6 秒
继电器触点容量	1A, DC30V
最大探测距离	25 米
视角	90 度
工作温度	-25℃~+70℃
相对温度 (无冷凝)	≤95%
尺寸	124x118x122 mm
重量	约 1.9 千克
防护等级：	IP 44

15.4 尺寸图

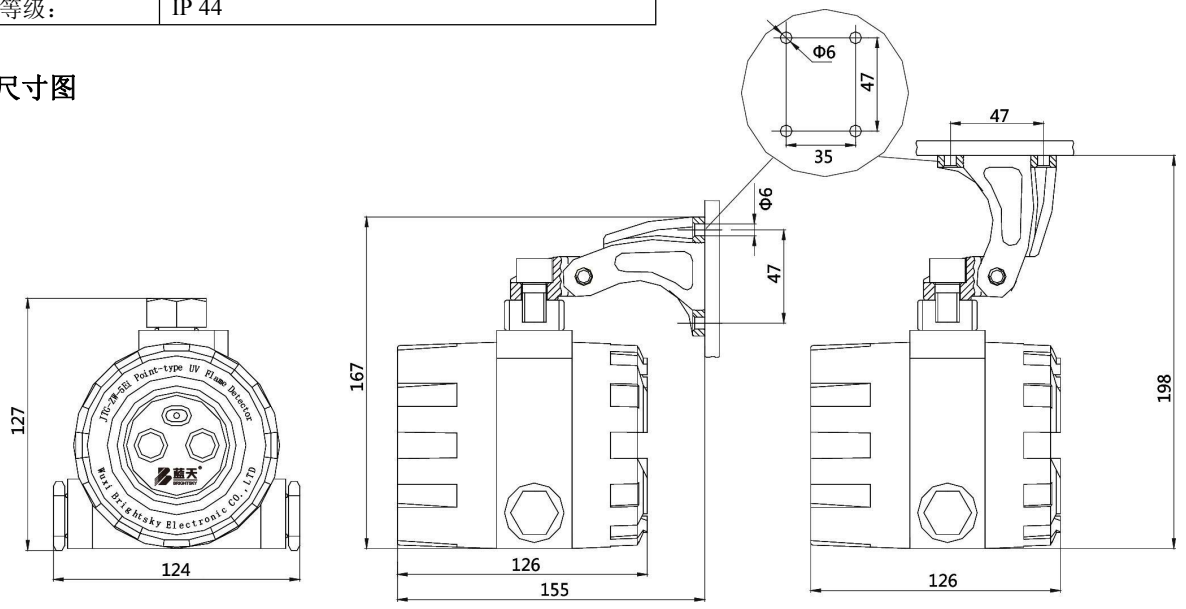

15.5 连线图

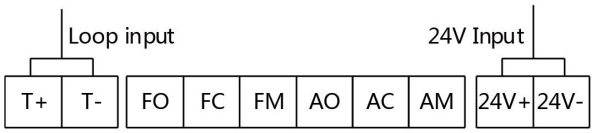

15.6 输出触点说明

AM/AC 火警无源常闭触点输出，触点容量 1A/30VDC,火警时打开
AM/AO 火警无源常开触点输出，触点容量 1A/30VDC,火警时闭合
FM/ FC 故障无源常闭触点输出，触点容量 1A/30VDC,故障时打开
FM/ FO 故障无源常开触点输出，触点容量 1A/30VDC,故障时闭合
24V+ DC24V 电源正极输入
24V- DC24V 电源负极输入
T+/T- 回路

16 AD-BS10 型地址编码器

16.1 特性

- 体积小，携带方便
- 本身带 BS10 探测器通用底座，可直接将探测器旋上后进行地址输入，使用方便
- 带电池欠压指示灯

16.2 应用

只能用于对 BS10 系列总线器件进行地址输入和参数测试。

16.3 技术参数

工作电压		DC18V 或 DC24V
功耗	静态	≤1.75mA/DC24V,，≤1.9mA/DC18V
	工作状态	≤2.5mA/DC24V， ≤3.9mA/DC18V
材料		ABS
颜色		乳白色
工作温度		- 10℃~+ 50℃
相对温度（无冷凝）		≤95%
外形尺寸		180×107×25mm
重量		约 376 克
防护等级		IP 30

16.4 尺寸图

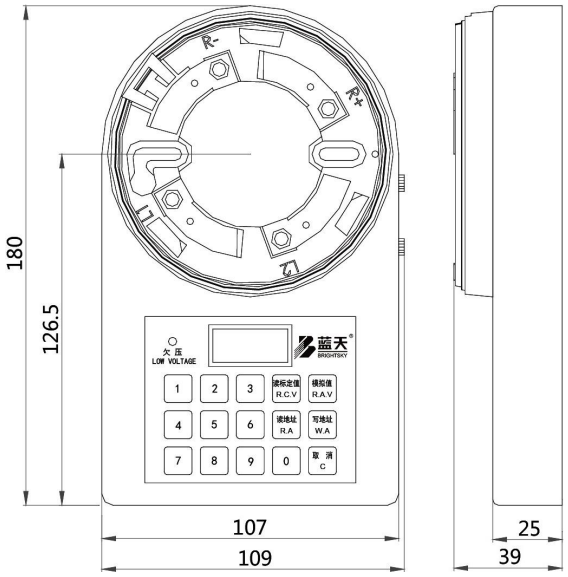

17 备件箱

17.1 特性

- 体积紧凑，携带方便
- 方便用户日常维护

17.2 备件箱中物品清单

标号	型号	名称	数量	备注
1	JTY-GD-BS10	点型光电感烟火灾探测器	5	
2	JTW-ZD-BS10	点型感温火灾探测器	2	
3	J-SAP-BS10	手动火灾报警按钮	2	不含底盒
4	J-SAP-BS10WP	手动火灾报警按钮	1	不含底盒，防水型
5	DI-BS10	工作间隔离单元	1	
6	LIC-BS10	线路隔离器	1	
7	AD-BS10	地址码编程器	1	
8	DB-BS10	探测器底座	1	
9	IMC-BS10	输入模块	1	
10	RMC-BS10	输入/输出模块	1	
11	SMC-BS10	火灾声光警报器	1	
12	JTG-IR-BS10	点型红外火焰探测器	1	
13	操作手册，安装指导和数据手册		1	
14	保险丝		若干	

18 实例：48500 吨散货船火灾探测报警系统及水基灭火系统控制图

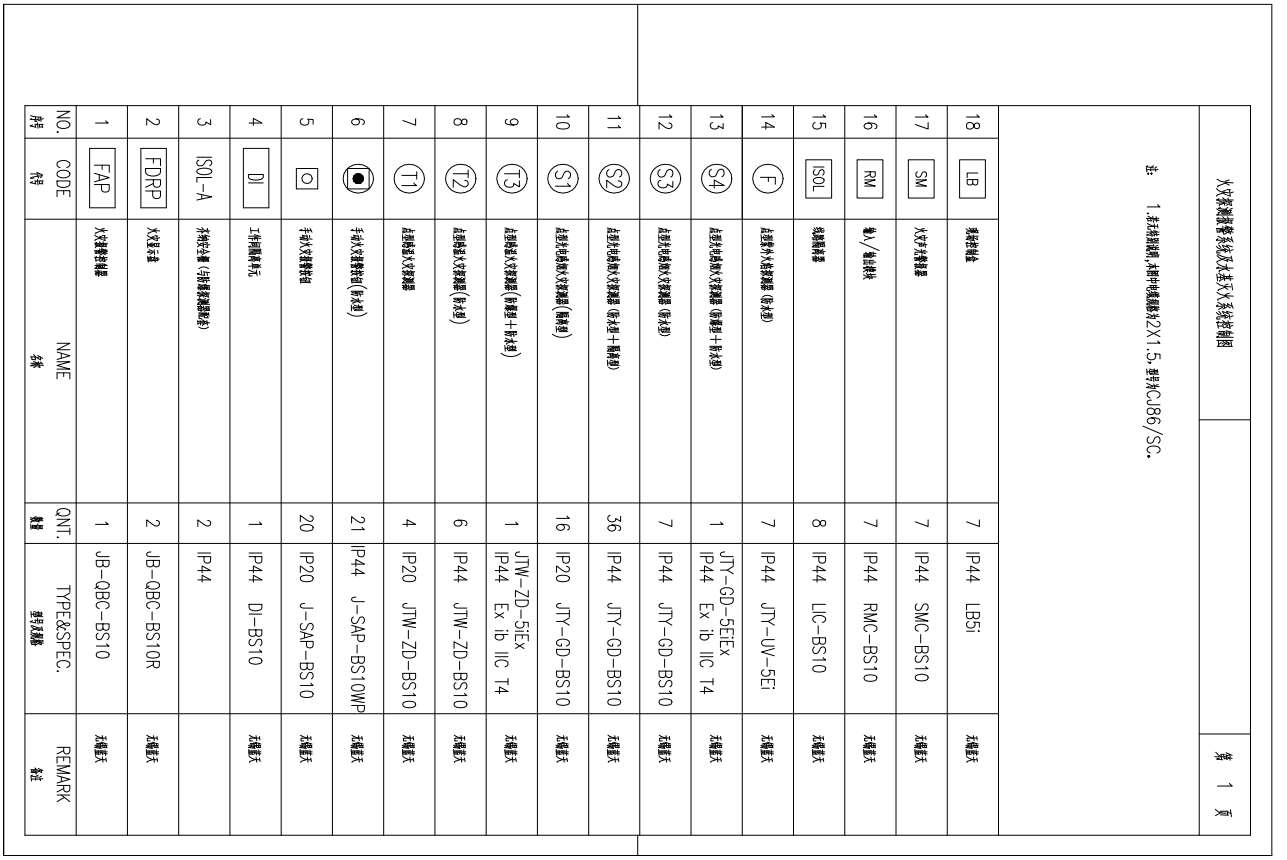

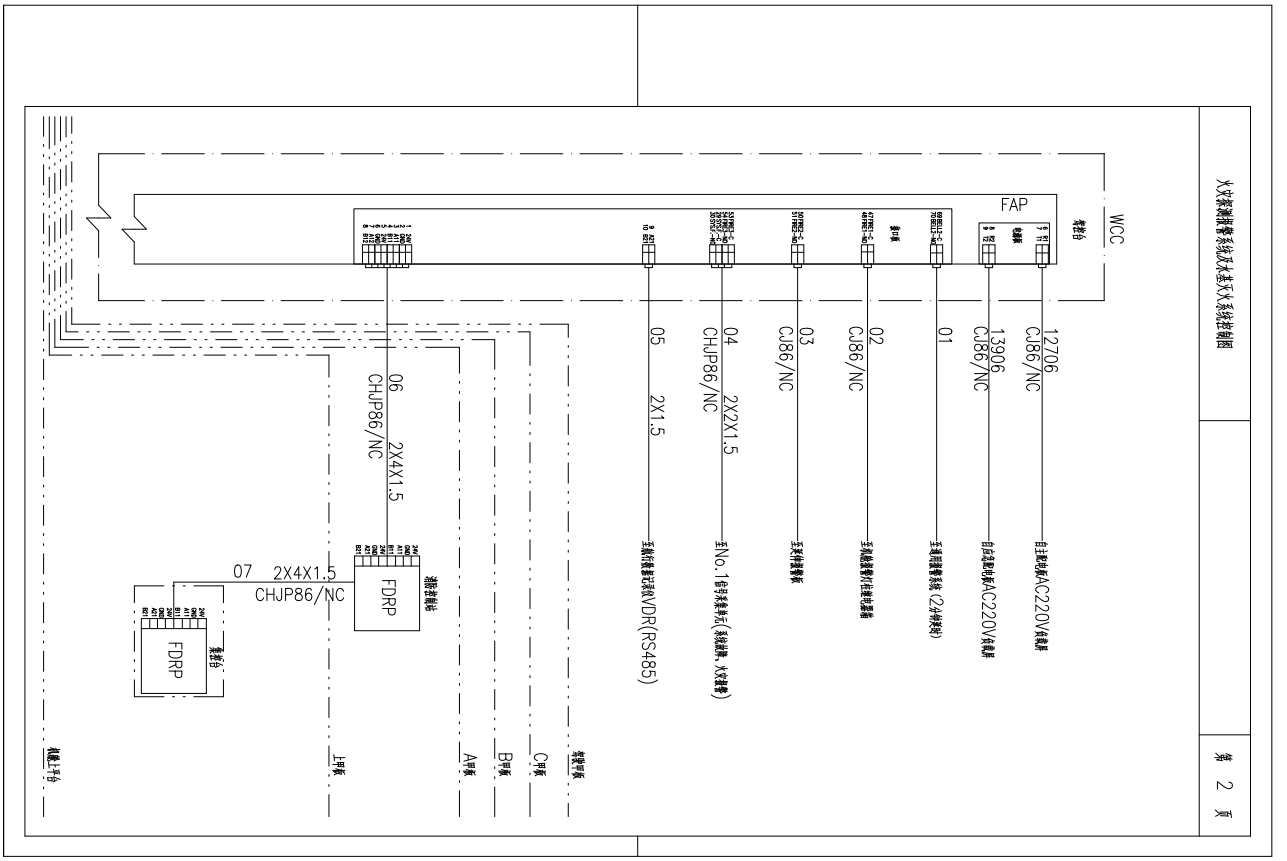

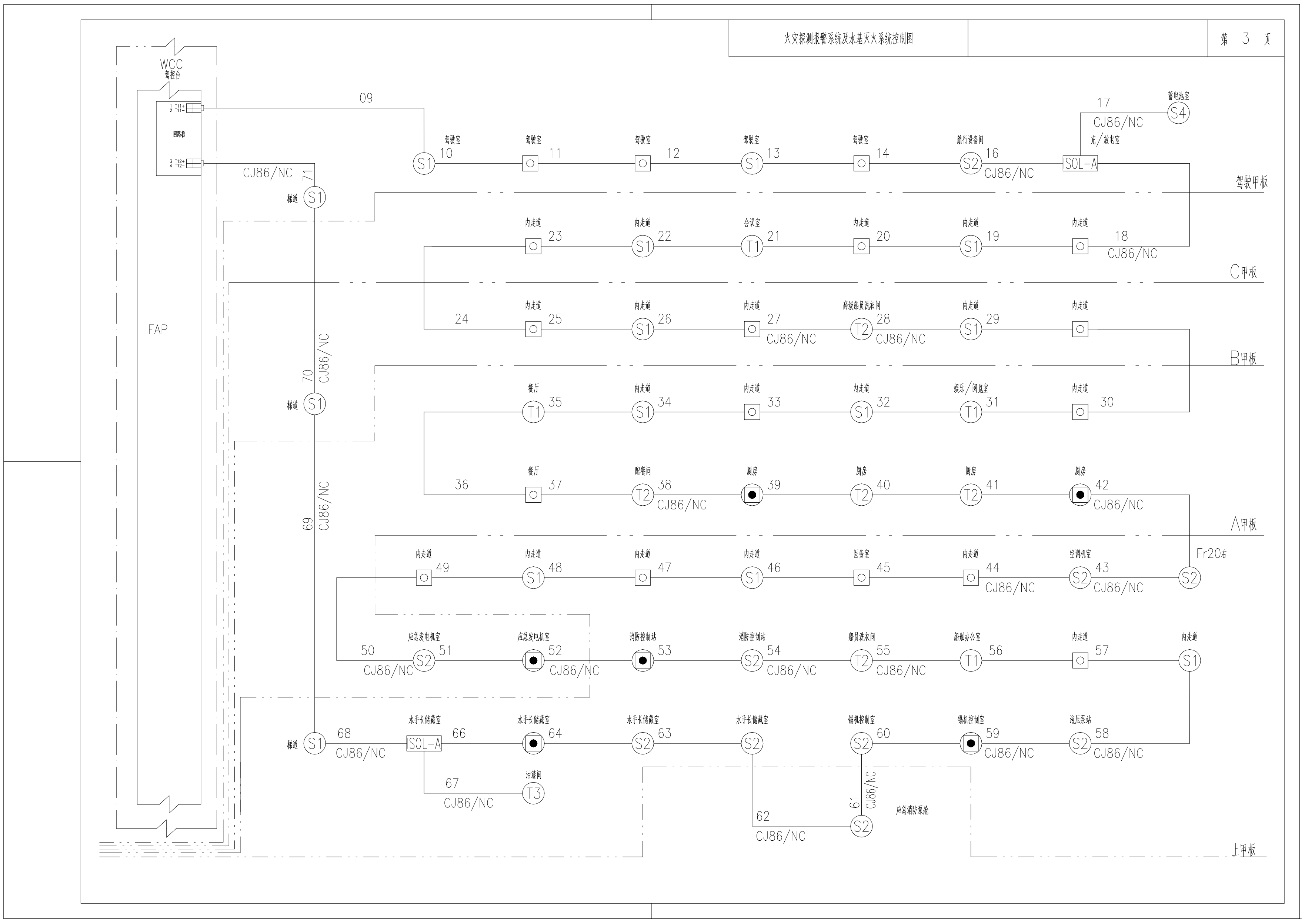
火灾探测报警系统及水基灭火系统控制图
第 3 页
WCC
驾控台
1 T11+
2 T11-
回路板
3 T12+
4 T12-
FAP
09
CJ86/NC
71
梯道
S1
70
CJ86/NC
69
CJ86/NC
驾驶室 S1 10
驾驶室 11
驾驶室 12
驾驶室 S1 13
驾驶室 14
航行设备间 S2 16 CJ86/NC
ISOL-A
17 CJ86/NC
充/放电室
蓄电池室 S4
驾驶甲板
内走道 23
内走道 S1 22
会议室 T1 21
内走道 20
内走道 S1 19
内走道 18 CJ86/NC
C甲板
24
内走道 25
内走道 S1 26
内走道 27 CJ86/NC
高级船员洗衣间 T2 28 CJ86/NC
内走道 S1 29
内走道
B甲板
餐厅 T1 35
内走道 S1 34
内走道 33
内走道 S1 32
娱乐/阅览室 T1 31
内走道 30
36
餐厅 37
配餐间 T2 38 CJ86/NC
厨房 39
厨房 T2 40
厨房 T2 41
厨房 42 CJ86/NC
A甲板
Fr20#
内走道 49
内走道 S1 48
内走道 47
内走道 S1 46
医务室 45
内走道 44 CJ86/NC
空调机室 S2 43 CJ86/NC
S2
50 CJ86/NC
应急发电机室 S2 51
应急发电机室 52 CJ86/NC
消防控制站 53
消防控制站 S2 54 CJ86/NC
船员洗衣间 T2 55 CJ86/NC
船舶办公室 T1 56
内走道 57
内走道 S1
梯道 S1 68 CJ86/NC
水手长储藏室 ISOL-A 66
水手长储藏室 64
水手长储藏室 S2 63
水手长储藏室 S2
锚机控制室 S2 60
锚机控制室 59 CJ86/NC
液压泵站 S2 58 CJ86/NC
67 CJ86/NC
油漆间 T3
62 CJ86/NC
61 CJ86/NC
S2
应急消防泵舱
上甲板

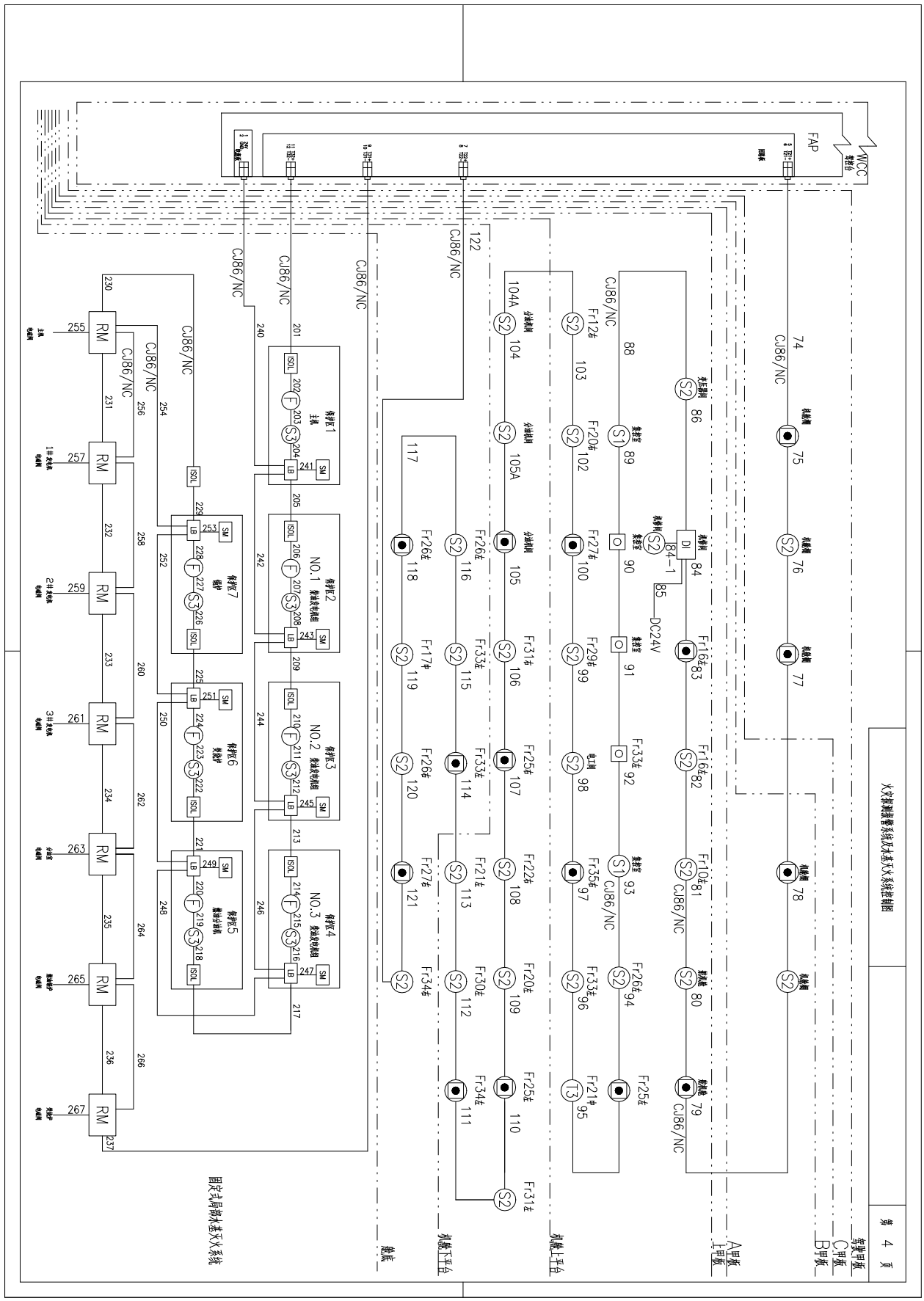
火灾探测报警系统及水基灭火系统控制图
第 4 页
驾驶甲板
C甲板
B甲板
A甲板
上甲板
机舱上平台
机舱下平台
机底
WCC
FAP
CJ86/NC
122
固定式局部水基灭火系统

JB-QBC-BS10

Fixed fire detection and fire alarm system

Water mist extinguishing control system

Design and Application manual

WUXI BRIGHTSKY ELECTRONIC CO.,LTD.

Content

1 Fire alarm controller, JB-QBC-BS10

1.1 General description

The JB-QBC-BS10 system is a state of the analogue addressable fire detection system designed to meet the major marine and industry requirements. Special methods has been taken to ergonomics and user friendliness with its logical self-instructing operator panel guiding the user to the various functions available. Conventional detectors can be connected to this system through INPUT module.

1.2 Installation

JB-QBC-BS10 fire alarm controller is composed of following parts: fire alarm control panel, interface board, loop board, power board and fire protection control board.
Two installation methods can be chosen by user: Wall type or flush mounting type. If the flush mounting type is selected, remove the fire alarm control panel from the controller box and install it according to the following dimension.

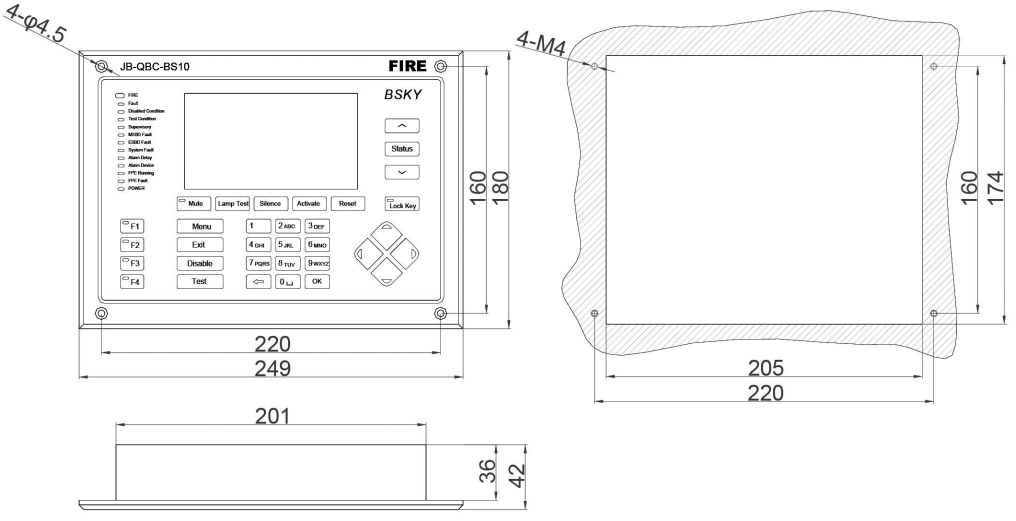

Flush mounting type

*The following dimension is for wall type installation.

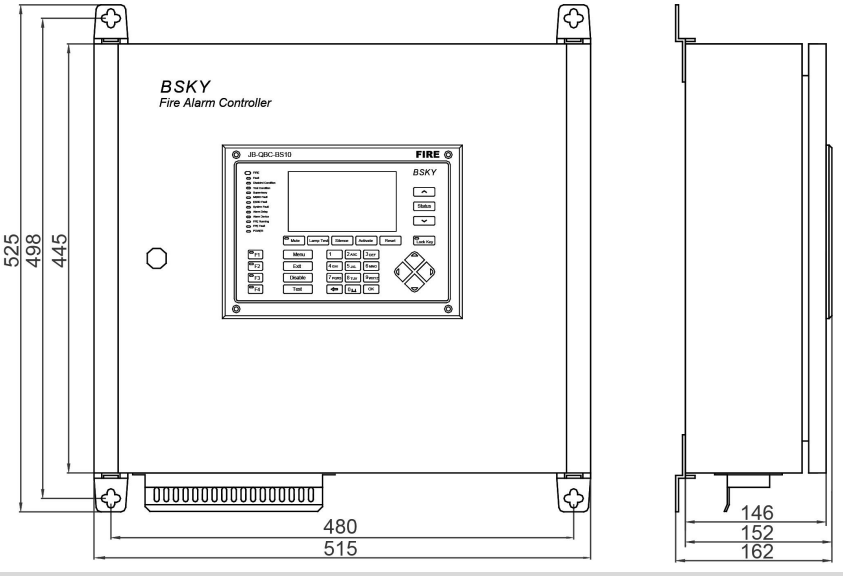

Wall type

1.3 Technical Specifications

Main power*	AC 110/220V (+10%~-15%) ， 50HZ/60HZ
Emergency power*	AC 110/220V (+10%~-15%) ， 50HZ/60HZ
Ship's DC power	DC 24V (+30%~-25%)
Battery inside	DC 24V，2.2AH
Power consumption	In monitoring state：≤10W；in alarm state：≤12W
Standard	EN54/2,4
Loop board number	Max. 2
Each loop board capacity	4 ring loops, max. 128 detectors or manual call points in each loop,.
Time to alarm from manual call point	≤5 S
Time to alarm from detector	≤10 S
Loop Signal transmission distance	≤500M
The distance between fire alarm controller and fire alarm repeater	≤1500M
Wiring mode	1、 BS10 series points - 2 wires，non-polarity 2、 BS10 series module - 4 wires，polarity；
Wire used in the system	Signal line used section is no more than 1.3mm^2 or 15AWG screen preventing burning twisted-pair; Power supply line is no more than 2.5mm^2 or 12AWG preventing burning twisted-pair;
Fire protection zone	Max. 16 zones
Output control contact	Dry contact output, contact capacity 1A,DC30V Fire output 6 (FIRE1~FIRE6) Fire delay output 1 (BELL2) PA output 1 Fault output 4 (FAULT1~FAULT4) Power fault output 2 (POW.FAU1/POW.FAU2) System fault output 2 (SYS.FAU1/SYS.FAU2) **Power supply to the output, DC24V. max. current 1A:** Fire delay output 1 (BELL1) Door hold output 1 (DOOR.)
Input contact	IN1 / IN2
Fire alarm record	Max 999 instances
Other records (include power on, fault alarm, associating, and so on)	Max 999 instances
Installation mode	wall type / flush mounting type
Operating temperature	5℃~55℃
Relative humidity	≤95%
The dimension of main control and display unit	515×525×146（height×width×thickness）mm^3
Weight	About22Kg
IP degree	IP44

***note: if the main power and emergency power input is AC110V, please set the switching power to AC110V**

1.4 The internal diagram for the fire alarm controller and the terminal specified for the boards

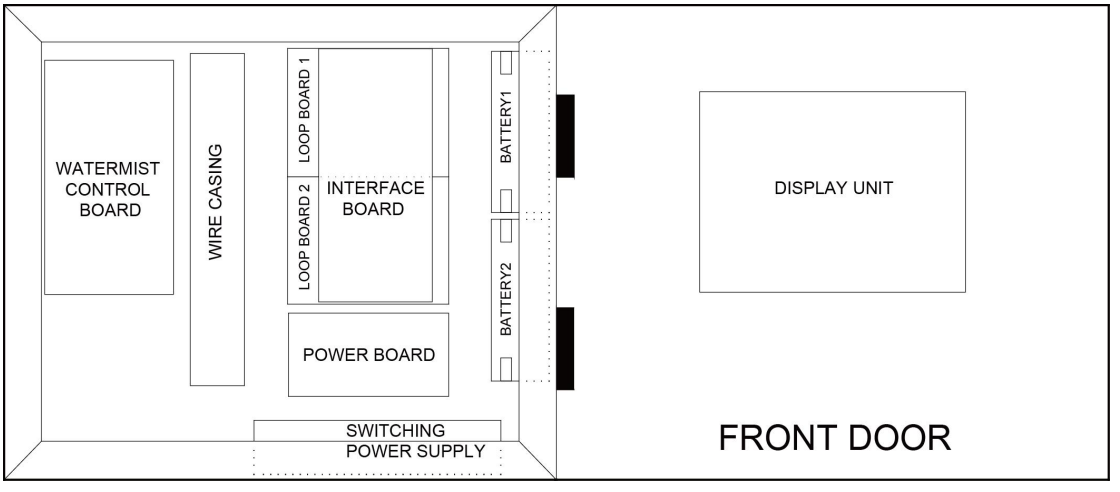

INTERFACE BOARD	Communication with fire alarm repeater	RS485. 1		24V	1
				GND	2
				A11	3
				B11	4
		RS485. 2		24V	5
				GND	6
				A12	7
				B12	8
	Output to VDR	RS485		A21	9
				B21	10
				GND	11
		RS232		TXD	12
				RXD	13
				GND	14
	Outside input	GA(IN)		C	15
				NO	16
		IN1		C	17
				NO	18
		PA(IN)		C	19
				NO	20
		IN2		C	21
				NO	22
	Fault output	General fault output	1	C	23
				NO	24
				NC	25
			2	C	26
				NO	27
				NC	28
			3	C	35
				NO	36
				NC	37
			4	C	38
				NO	39
				NC	40
		Power fault output	1	C	32
				NO	33
				NC	34
			2	C	44
				NO	45
				NC	46
		System fault output	1	C	29
				NO	30
				NC	31
			2	C	41
				NO	42
				NC	43
	Fire alarm output	General fire alarm output	1	C	47
				NO	48
				NC	49
			2	C	50
				NO	51
				NC	52
			3	C	53
				NO	54
				NC	55
			4	C	60
				NO	61
				NC	62
			5	C	63
				NO	64
				NC	65
			6	C	66
				NO	67
				NC	68
		Fire alarm delay output	1	+	56
				–	57
			2	C	69
				NO	70
		PA(OUT)		C	58
				NO	59
		DOOR.		MD+	71
				MD–	72
	EX. DC24V INPUT			–	73
				+	74

LOOP BOARD	LOOP1	IN	T11+	1
			T11–	2
		OUT	T12+	3
			T12–	4
	LOOP2	IN	T21+	5
			T21–	6
		OUT	T22+	7
			T22–	8
	LOOP3	IN	T31+	9
			T31–	10
		OUT	T32+	11
			T32–	12
	LOOP4	IN	T41+	13
			T41–	14
		OUT	T42+	15
			T42–	16

POWER BOARD	DC24V OUT	24V	1
		GND	2
	SHIP'S DC24V	P1(24V)	3
		N1(GND)	4
	EARTH	GROUND	5
	ESBD 110/220VAC	R1	6
		T1	7
	MSBD 110/220VAC	R2	8
		T2	9
	110/220VAC OUT	R3	10
		T3	11

WATERMIST CONTROL BOARD	Water mist zone output control		1	C	1
				NO	2
				NC	3
			2	C	4
				NO	5
				NC	6
			3	C	7
				NO	8
				NC	9
			4	C	10
				NO	11
				NC	12
			5	C	13
				NO	14
				NC	15
			6	C	16
				NO	17
				NC	18
			7	C	19
				NO	20
				NC	21
			8	C	22
				NO	23
				NC	24
			9	C	25
				NO	26
				NC	27
			10	C	28
				NO	29
				NC	30
	Outside input	CPE		C	31
				NO	32
		FPE		C	33
				NO	34
	Internal connection in the controller	IN		24V	35
				GND	36
				T1+	37
				T1–	38
		OUT		24V	39
				GND	40
				T2+	41
				T2–	42

DISPLAY UNIT	Communication with interface board or fire alarm repeater	1	IN	24V	1
				GND	2
				A11	3
				B11	4
			OUT	24V	5
				GND	6
				A12	7
				B12	8
		2	IN	24V	9
				GND	10
				A21	11
				B21	12
			OUT	24V	13
				GND	14
				A22	15
				B22	16
	BUS			T+	17
				T–	18
	USB1				
	USB2				

1.5 Wiring diagram between loop board and points

In the following diagram, the cable used in loop is shielded and the shield must be grounded at the ends.

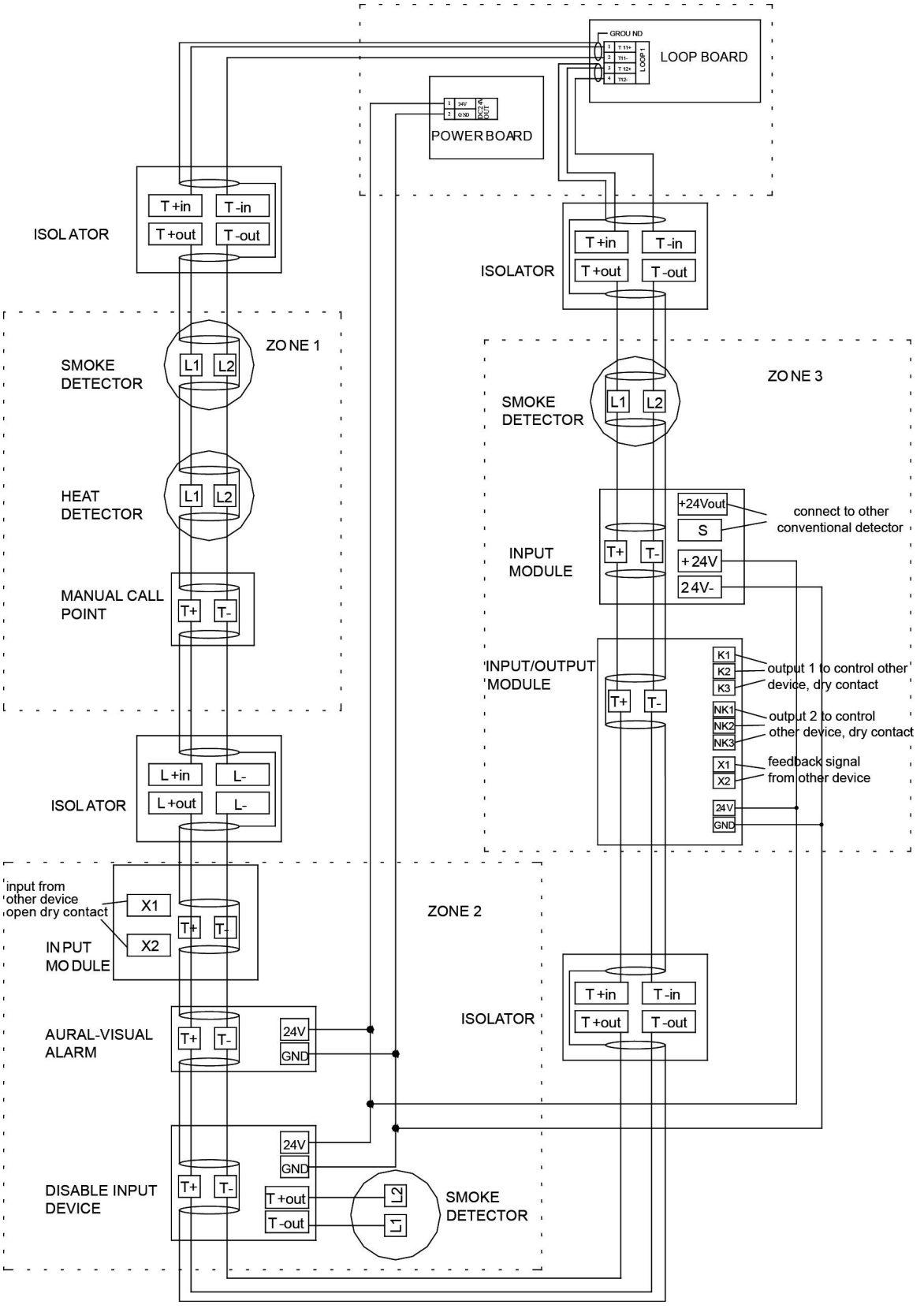

1.6 Cable

It is of the utmost importance that all cable are connected correctly to the terminals in the controller, detectors and other device connected to this system.
All cables must be connected to the terminals with end sleeves in order to avoid shirt-circuiting between cable cores. Ensure that the end sleeves fit the cables(dimension). Avoid connecting two or more cables to the same terminal. If necessary, use an end sleeve with sufficient size for two(or more) cables. When dismantling the cable, use a shrink tube at the cable end in order to avoid mechanical damage . Never use tape for the insulation of cables.

Choice of cable：
Keep all cables for the fire alarm system separated. Cables for the different functions must be separate. Lines for detector loops and power supply can therefore not be in the same cable. Cable dimensions mentioned are minimum dimensions.

***Note! All loops/communication cables must be shielded. The shield must be grounded at the ends.**

Device	**Type of cable**
Main AC220V	1.5mm^2
DC24V input	2.5mm^2
Earth	6.0mm^2
Communication, max. Voltage drop 4%	4*1.5 mm^2 with shield
Addressable loops	2*1.5 mm^2 with shield
Multi-cable	1.5mm^2 with shield

2 Fire alarm repeater, JB-QBC-BS10R

2.1 General description

Fire alarm repeater is used to display the alarm messages existing in the system such as fire alarm, fault alarm, disable condition, test condition, supervisory and so on.
Fire alarm repeater is only used to display messages, you can only check the alarm messages and mute fire alarm repeater's internal buzz.

2.2 Technical specifications

Power supply	DC 24V±10%
Power consumption	In monitoring state:≤1.5W；in alarm state:≤2.4W
The distance between fire alarm controller and fire alarm repeater	≤1500M
Cable	Signal wires is shield twisted wires larger than 1.5mm^{2}or 15AWG Power wires is shield twisted wires larger than 1.5mm^{2}or 15AWG
Dimension	245×176×102（height×width×thickness）mm
Operating temperature	5℃~55℃
Relative humidity	≤95%
Installation mode	wall type/ flush mounting type
Weight	About2.2Kg
IP degree	IP44

2.3 Dimension of the fire alarm repeater

The front panel dimension is the same with the fire alarm control panel.

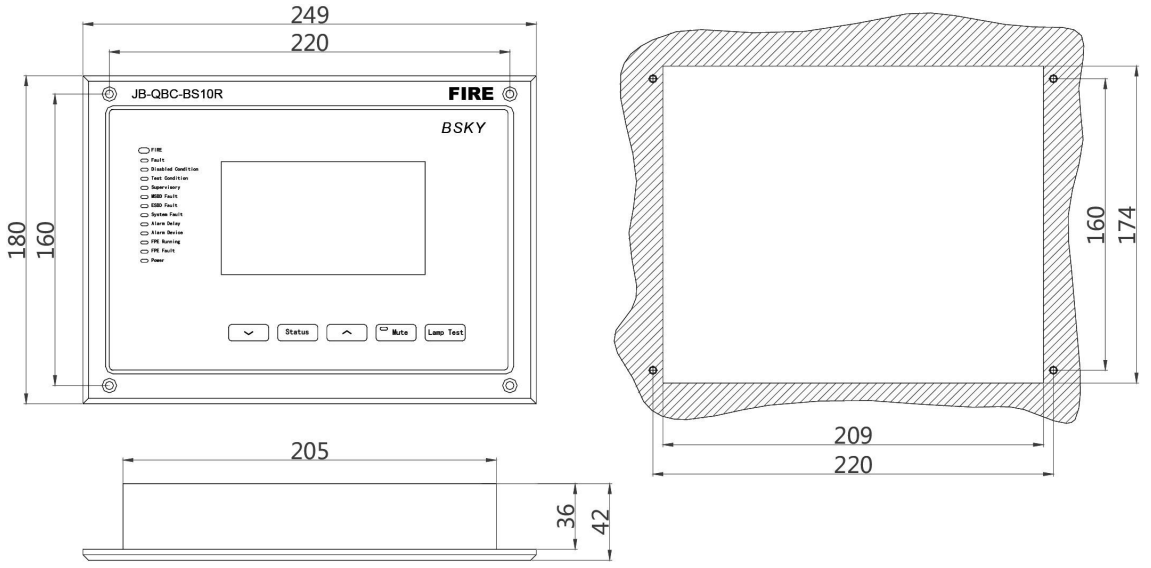

Flush mounting type

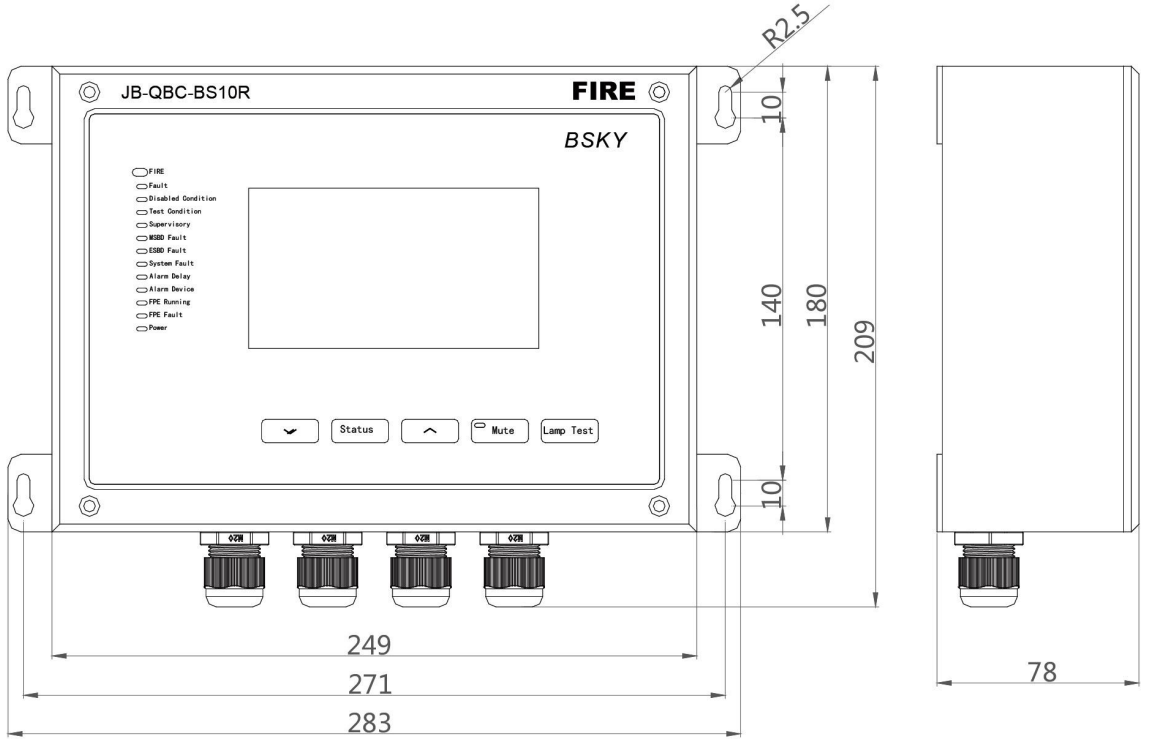

Wall type

2.4 The terminal of fire alarm repeater

FIRE ALARM REPEATER	Communication with fire alarm controller	1	IN	24V	1
				GND	2
				A11	3
				B11	4
			OUT	24V	5
				GND	6
				A12	7
				B12	8
		2	IN	24V	9
				GND	10
				A21	11
				B21	12
			OUT	24V	13
				GND	14
				A22	15
				B22	16

2.5 Connections

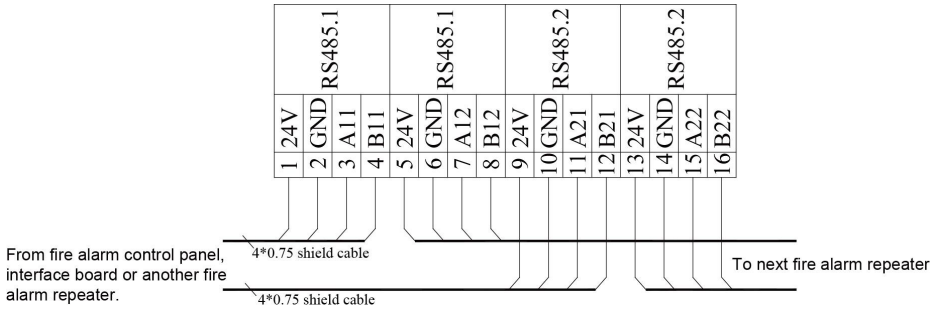

3 Smoke detector, JTY-GD-BS10

3.1 Features

- Interactive.
- Comprise the adaptive and self-learning functions.
- Selective to misleading environmental phenomena that in a traditional system would lead to an unwanted fire alarm.
- Monitoring of optical path and electric circuit.
- Built-in thermo-resistor for detecting environment temperature.
- Comprises a built-in alarm indicator (LED).
- Immunity to electromagnetic disturbance.
- Designed to meet the requirement of the major maritime classification societies.

3.2 Applications

JTY-GD-BS10 is a point smoke detector for detection of combustion gases mainly consisting of visible particles. The detector has a built in thermistor and is designed for use with JB-QBC-BS10 interactive fire alarm system, which can provide temperature information from the detector point.
JTY-GD-BS10 is install with detector box DBW5i fitted with two cable glands. for applications where a higher degree of weather protection is required.
The DB5i(waterproof) must fixed For Degree of protection IP44.
JTY-GD-BS10 is suitable for use in most applications where visible smoke can be expected during a fire such as: Bedrooms, Corridors, Restaurants, Electrical rooms, Offices, etc.

3.3 Principle

Photoelectric, operating on the light scatter principle.

3.4 Technical Specifications

Voltage	DC 18 ~ 26V
Current consumption Stand by Alarm Current Current for External alarm indicator	 ≤ 0.35mA ≤ 1.5mA ≤ 1.2mA
Standard	EN-54/7
Materials	ABS
Color	Light grey
Working temperature	-25℃~+70℃
Humidity (non condensing)	≤95%
Dimensions	Φ100×38mm
Weight include base	About 126g
Degree of protection	IP 44 (include water-proof base)

3.5 Dimensions

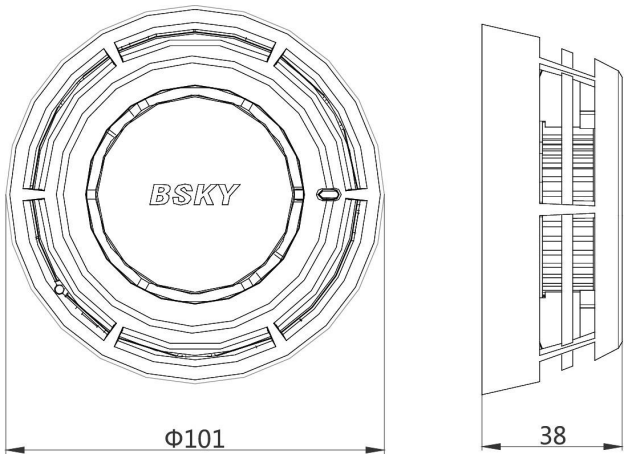

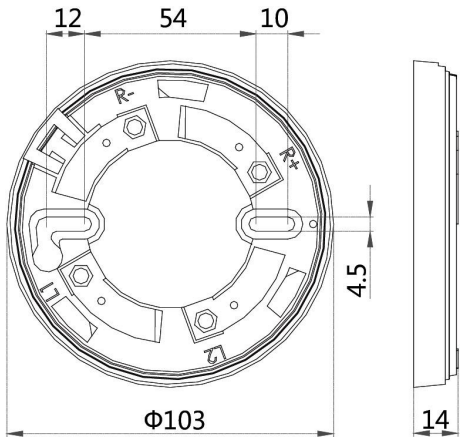

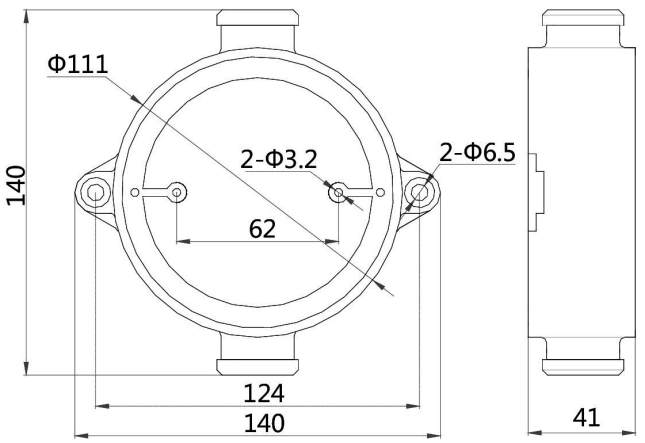

Detector Base DB-BS10	Detector water proof base DBF-BS10

3.6 Connections

L1: loop line 1, no polarity

L2: loop line 2, no polarity

When LED or other equipment is connected to theLED output, required the detector base DB-BS10 is connected between terminals R+and R-, terminal R+ being the positive terminal.

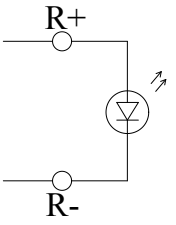

4 Heat detector, JTW-ZD-BS10

4.1 Features

- Heat detector intended for use in dry areas.
- Plug-in detector head.
- Comprises a built-in alarm indicator (LED).
- Configurable to class A2.
- Immunity to electromagnetic disturbance.
- Not influenced by dust, humidity, exhaust gases, electromagnetic fields such as radio transmitters cellular telephones, etc.
- Designed to meet the requirement of the major maritime classification societies.

4.2 Applications

JTW-ZD-BS10 is a point heat detector for detection of rise in environment temperature caused by a fire. The detector is designed for use with Bsky's interactive fire alarm system.
The DB5i(waterproof) must fixed For Degree of protection IP44.
JTW-ZD-BS10 is often used in areas where the environment is likely to produce false/unwanted alarms from Smoke detectors such as: Kitchens, Galleys, Bathrooms, Boiler rooms, Workshops, etc.

4.3 Principle

Temperature measurement by means of a thermistor for registration and reading of temperature at the detector point. Alarms at temperature according to configured class (Ref. table l).

Table1:

Detector class	Typical application temperature	Maximum applicationtemperature	Minimumstatic respinsetemperature	Maximumstatic responsetemperature
A2	25	50	54	70

4.4 Technical Specifications

Voltage	DC 18 ~ 26V
Current consumption Stand by Alarm Current Supply External alarm indicator	 ≤ 0.35mA ≤ 1.5mA ≤ 1.2mA
Standard	EN54/5
Materials	ABS
Color	Light grey
Max. application	Ref. table l
Working temperature	-25℃~+70℃
Humidity (non condensing)	≤95%
Dimensions	Φ100×38mm
Weight	About 110g
Degree of protection	IP 44(include water-proof base)

4.5 Dimensions

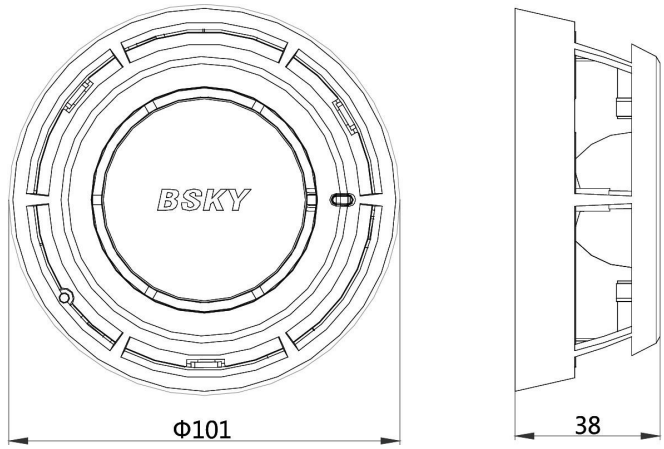

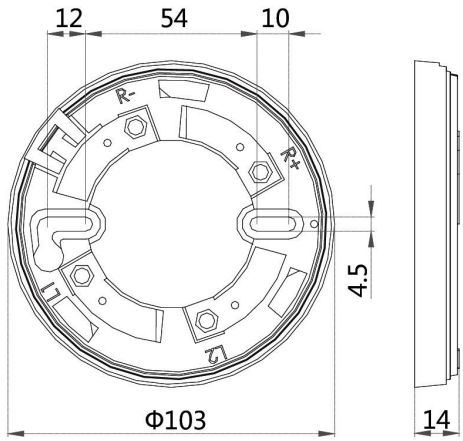

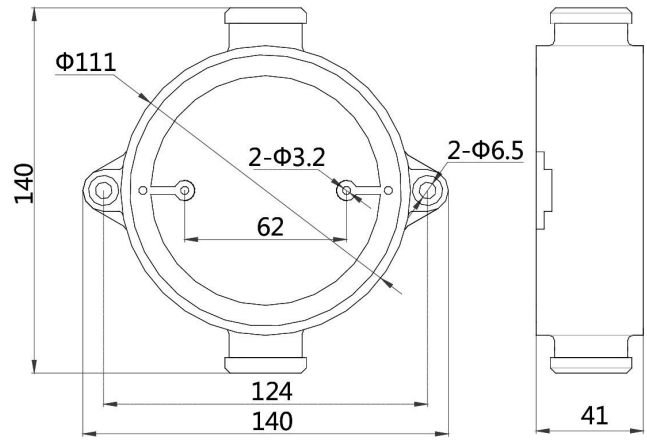

Detector Base DB-BS10	Detector water proof base DBF-BS10

4.6 Connections

L1: Connect Alarm Bus
L2: Connect Alarm Bus
When LED or other equipment is connected to the
LED output, required the detector base DB-BS10 is connected between terminals R+and R-, terminal R+ being the positive terminal.

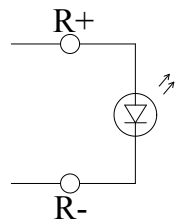

5 Manual call point, J-SAP-BS10

5.1 Features

- Addressable
- Max. 3-second response time
- The call-point comprises a built-in indicator (LED)
- Can be tested by means of a special test-key
- Proven technology
- Designed to meet the requirement of the major maritime classification societies

5.2 Applications

J-SAP-BS10 manual call-point is used for indoor environment.
The call-point is designed for JB-QBC-BS10 fire alarm system.

5.3 Principle

Alarm: Press the panel center to activate the manual call point, releasing alarm switch, then one yellow ribbon showed on the panel's top.
Reset: use annex's key insert to the bottom of manual call point , after rapidly pull off the key downwards, the frame related pulled off , then push the frame upwards to the death.

5.4 Technical Specifications

Voltage	DC 18 ~ 26V
Current consumption Stand by Alarm (LED)	 ≤0.3mA ≤1.5mA
Standard	EN54/11
Material	ABS
Color	Red
Working temperature	-25℃~+70℃
Humidity (non-condensing)	≤95%
Dimensions	88×88×24mm
Weight	About 100g
Degree of protection,	IP 22

5.6 Connections

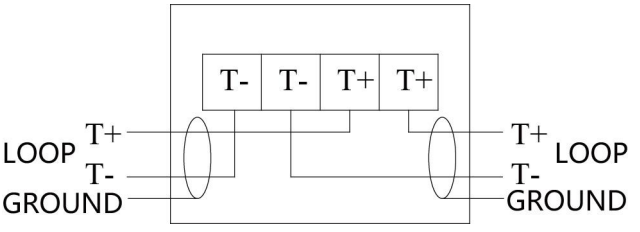

5.5 Dimensions

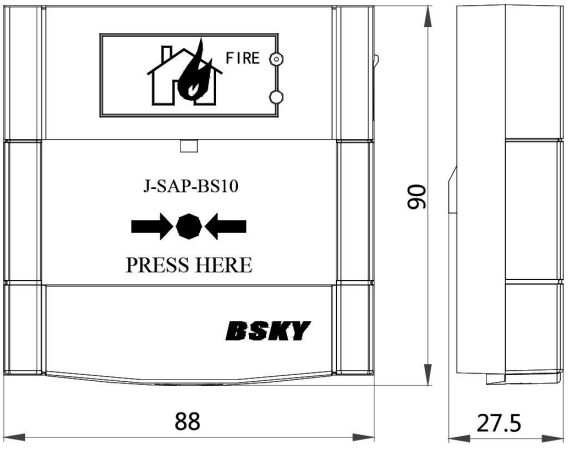

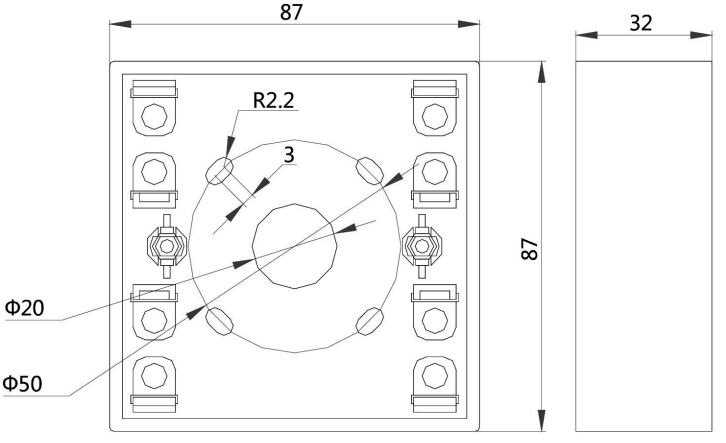

SJX manual call point junction box

6 Manual call point, water proof, J-SAP-BS10WP

6.1 Features

- Addressable
- Max. 3-second response time
- The call-point comprises a built-in indicator (LED)
- Can be tested by means of a special test-key
- Proven technology
- The call-point be capable of apply outdoors
- Designed to meet the requirement of the major maritime classification societies

6.2 Applications

J-SAPW-BS10 is a manual call-point for indoor use. The call-point is designed for use with Bsky's interactive fire alarm system.

6.3 Principle

Alarm: Press down the panel operation, releasing alarm switch, then one yellow ribbon showed on the panel's top.
Reset: use annex's key insert to the bottom of manual call point , after rapidly pull off the key downwards, the frame related pulled off , then push the frame upwards to the death.

6.4Technical Specifications

Voltage	DC 18 ~ 26V
Current consumption Stand by Alarm (LED)	 ≤0.3mA ≤1.5mA
Standard	EN54/11
Material	ABS
Color	Red
Working temperature	-25℃~+70℃
Humidity (non-condensing)	≤95%
Dimensions	130×128×83mm
Weight	About 300g
Degree of protection	IP 44

6.6 Connections

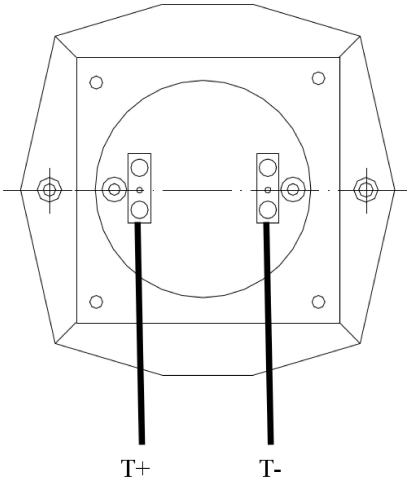

LOOP No polarity connecting

6.5 Dimensions

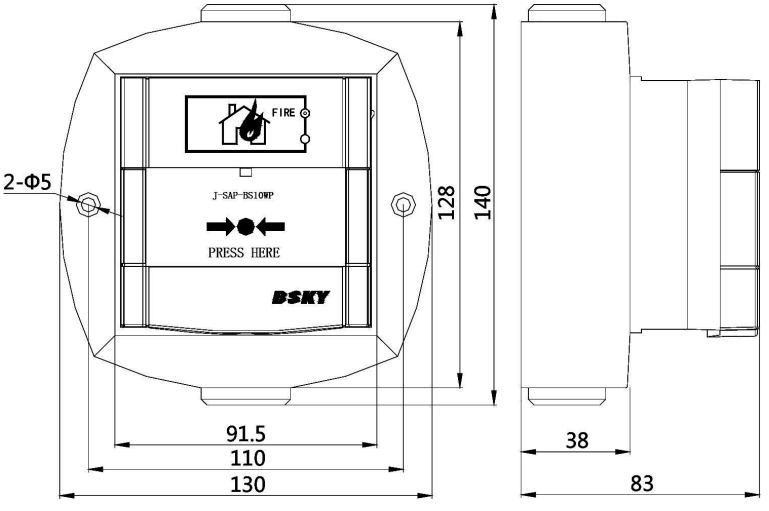

7 Disable input device, DI-BS10

7.1 Features

- Disables detection zone(s)
- Two buttons for disable/ restore the zone
- One output loop for zone
- Addressable unit
- Major powered by DC24V

7.2 Applications

DI-BS10 disable input device is used to disable the zone connected to this device if needed.
Power indicator will be lit steady in green color after powered on .
Press “DISABLE”button to disable the zone connected to this disable input device, disable indicator will be lit steady in yellow color.
Press “RESTORE” button to restore the zone, the disable indicator will be shut down.

7.3 Technical Specifications

Operating Voltage	DC 18V~26V
Current consumption Stand-by Action	 Loop:≤0.38 mA; DC24V:≤ 1.2mA Loop:≤1.5 mA; DC24V :≤10.0 mA
Material	ABS
Color	Light grey
Indicator	DC24Vpower green led Disablement yellow led
Working temperature	-25℃~+70℃
Humidity (non-condensing)	≤95%
Dimensions	239×120×68 mm
Weight	About 625g
Degree of protection	IP 44

7.4 Dimensions

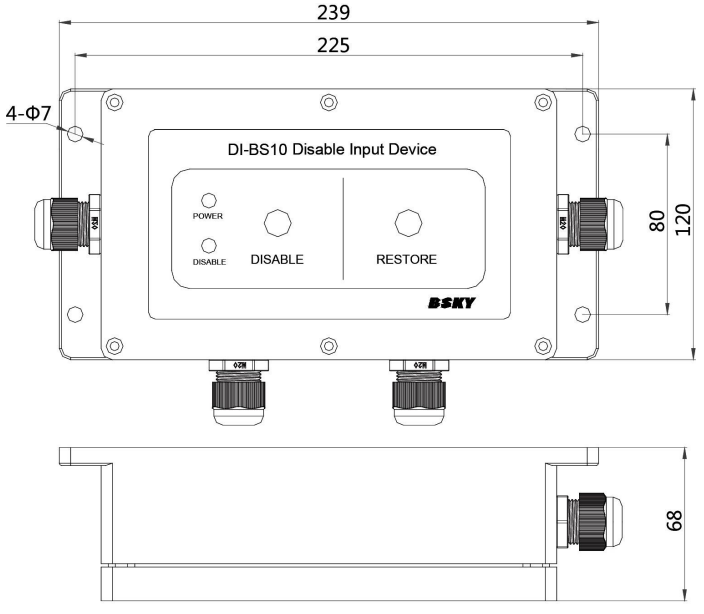

7.5 Connections

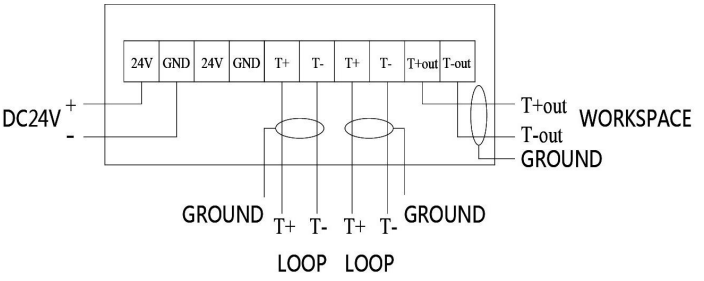

Note :

- Please short the jumper JP1 to read or write it by addressable encoder.
- Short the jumper JP1, ignore the disconnected lines connected to the terminal of 24V/GND.

8 Isolator, LIC-BS10

8.1 Features

- Isolates faulty part of the loop in the event of a short circuit
- Automatically reset once the fault has been cleared
- Visual Indicator: yellow LED
- Powered from loop

8.2 Applications

Isolator LIC-BS10 is used to protect the loop. If the loop wires are short, the isolator will be activated, the short lines following that isolator is disconnected from the loop. No address in this isolator.
Yellow indicator will be lit if the isolator is activated
This isolator can be added to the detector's base, that means: remove the cover of the isolator, and add base of DB-BS10 to the isolator, the base will be changed to isolator base.

8.3 Technical Specifications

Voltage	DC 18 ~ 26V
Current consumption Stand by Action Current	 ≤ 0.78mA ≤ 4.6mA
Materials	ABS
Color	Light grey
Working temperature	-25℃~+70℃
Humidity (non condensing)	≤95%
Dimensions	Φ105×43 mm
Weight	About129g
Degree of protection	IP 44 (include water-proof base)

8.5 Connections

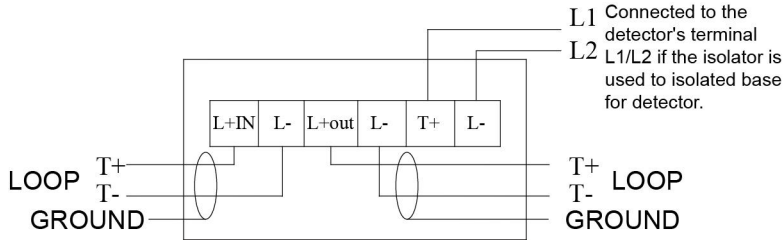

8.4 Dimensions

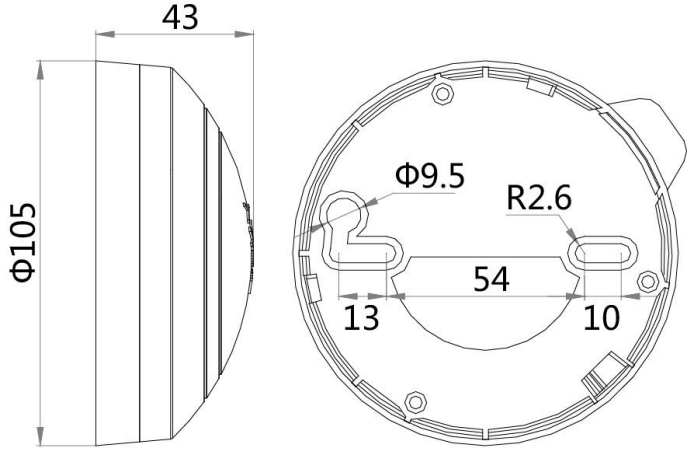

9 Input module, IMC-BS10

9.1 Features

- Addressable.
- Configurable input.
- Input module for interfacing external units, connect conventional detector etc., onto BS10 fire-alarm system.
- Monitored input fault of break line.
- Intended for connection to BS10 interactive fire-alarm system.
- Designed to meet the requirements of the major maritime classification societies.

9.2 Applications

IMC-BS10 input module is used to interface different types of signal devices with open-contact (no-source) onto the BS10 fire-alarm system.
The module has been designed for use conventional detector onto BS10 fire-alarm system
Application also includes: Alarm push-buttons; Flame detectors with relay contacts; Sprinkler contacts, etc.

9.3 Principle

Monitoring the input signal, normally open dry contact. Short the contacts to set alarm. Monitored fault of open circuit

9.4 Technical Specifications

Voltage	DC 18 ~ 26V
Current consumption Stand-by Alarm	 Loop:≤0.5 mA DC24V:≥6.5mA; ≤18mA Loop:≤1.5 mA DC24V:≥20mA; ≤45mA
Material	ABS
Color	Light gray
Input function	Configurable
Working temperature	-25℃~+70℃
Humidity (non-condensing)	≤95%
Dimensions	239×120×68 mm
Weight	About 632 g
Degree of protection	IP 44

9.5 Dimensions

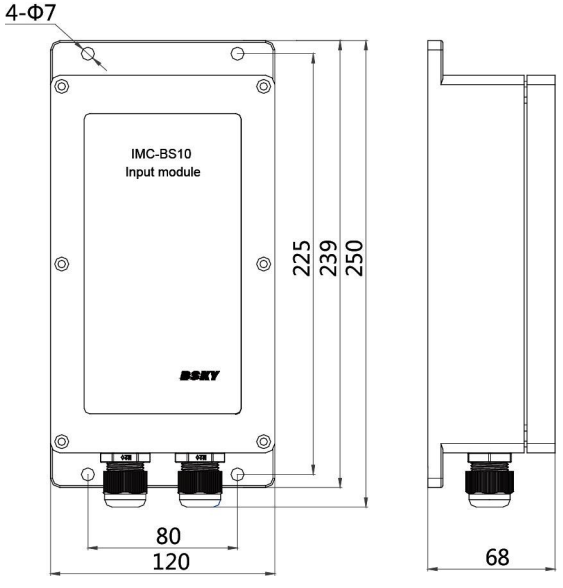

9.6 Connections

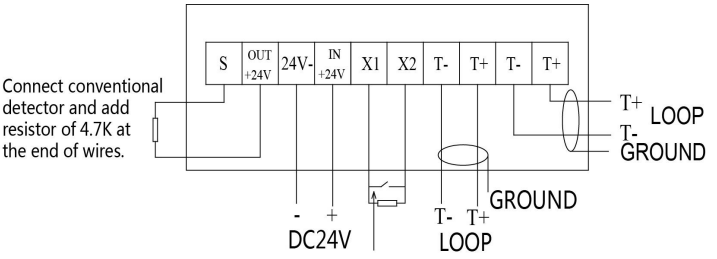

Open dry contact signal input and add resistor of 200K at the end of wires.

Note:

- Please short the jumper JP1 and JP2 to read or write it by addressable encoder.
- Short the jumper JP1, ignore the lines disconnected fault connected to the terminal of S/out +24V and in+24V/24-.
- Short the jumper JP2, ignore the lines disconnected fault connected to the terminal of X1/X2.

10 Input/output module, RMC-BS10

10.1 Features

- Addressable.
- Provides 2 types dry contacts.
- Proven technology.
- Designed to meet the requirements of the major maritime classification societies.

10.2 Applications

RMC-BS10 Input/Output module can control the external equipment through dry contact NO/C/NC

10.3 Technical Specifications

Voltage	DC 18～26V
Current consumption: Stand by Alarm	 ≤0.38mA ≤2.60mA
Material	ABS
Color	Light grey
Output	2, dry contact
Contact capacity	Max. 2A - 30V DC
Working temperature	-25℃～+70℃
Humidity (non condensing)	≤95%
Dimensions	239×120×68 mm
Weight	About 675 g
Degree of protection	IP 44

10.5 Connections

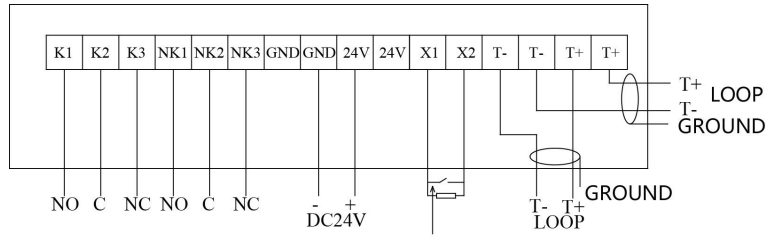

Open dry contact signal input and add resistor of 200K at the end of wires.

10.4 Dimensions

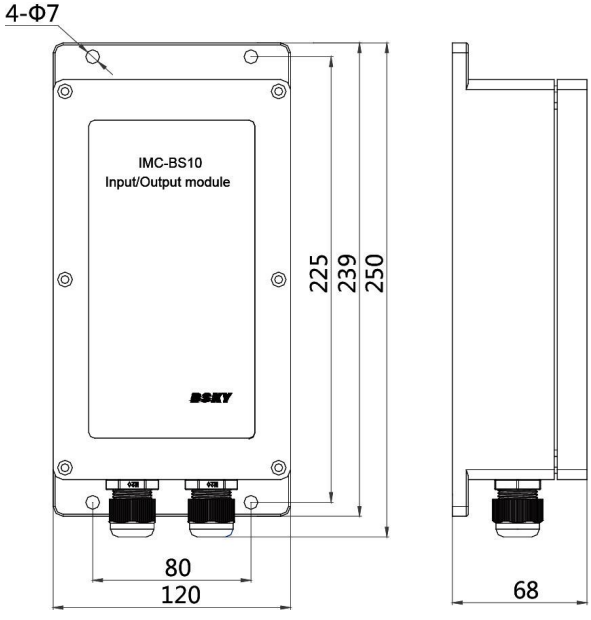

Notes:

- Module can monitor status of the line connected to the terminal K1(NO)/ K2(C). In order to use this function, connect the 24V+ to K1 and output line connected to K2, 24V- is common, end of line resistor is less than 10K.
- Please short the jumper JP1, JP2 and JP3, then read or write the module by addressable encoder.
- Short the jumper JP1, ignore the lines disconnected fault connected to the terminal of X1/X2.
- Short the jumper JP2, ignore the lines disconnected fault connected to the terminal of 24V+/24V-.
- Short the jumper JP3, ignore the lines disconnected fault connected to the terminal of K1/K2.

11 IR flame detector, JTG-IR-BS10

11.1 Features

- Interface for IMC-BS10 input module
- DC24V-powered
- High degree of protection
- High sensitive

11.2 Applications

IR flame detector is immunity to the sunlight, manmade light, heat radiation, electromagnetic interference, and so on.
It's water proof, and can be used in industry environment.
It should be used with the IMC-BS10 input module together.
Normally it is used to detect the flame(the combustion of wood, plastics, alcohol, oil, gas, and so on) and easy to installed

11.3 Technical Specifications

Operating Voltage	DC 18V~30V
Current consumption Stand-by Alarm	 ≤25 mA ≤35 mA
Standard	EN54/10
Material	Aluminum
Color	Silver
Indicator	Delay period: Green color, steady Normal : Green color, flashing Alarm: Red color, steady
Power on delay time	30S
The relay's contact capacity	2A, DC30V
Max. detecting distance	25m
Angle of view	90 degree
Working temperature	-25℃~+70℃
Humidity (non-condensing)	≤95%
Dimensions	124×118×122 mm
Weight	About 1.9kg
Degree of protection	IP 44

11.5 Connections

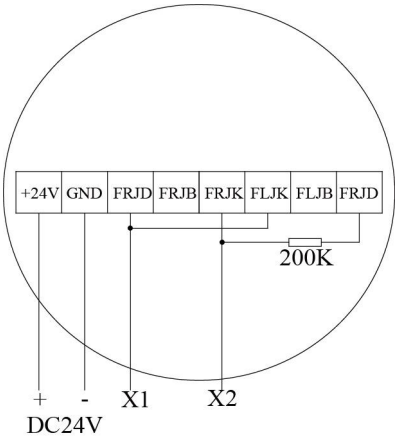

IR flame detector should be used with the IMC-BS10 input module together for JB-QBC-BS10 fire alarm system.
Note:

- FRJD / FRJB/ FRJK: Fire relay output, dry contact, FRJD->common, FRJB->normal close, FRJK->normal open.
- FLJD / FLJB/ FLJK: Fault relay output, dry contact, FLJD->common, FLJB->normal close, FLJK->normal open.

11.4 Dimensions

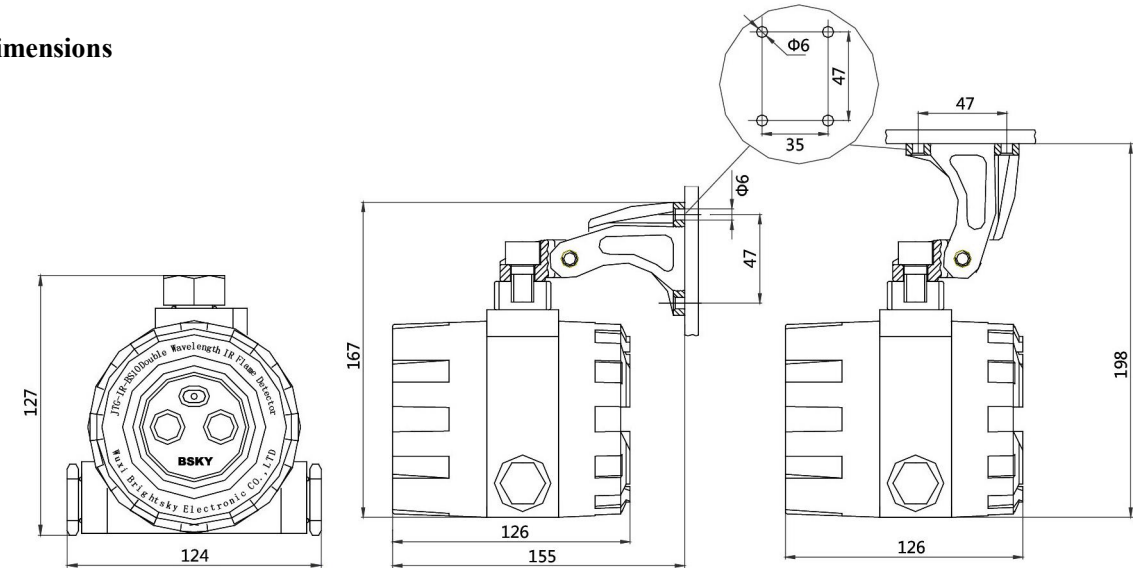

12 Aural-visual alarm , SMC-BS10

12.1 Features

- Addressable
- provided by a high intensity Strobe light
- High degree of protection

12.2 Applications

Aural-visual alarm SMC-BS10 is a intensity caution unit for locale personnel.
It is designed for use with BS10 interactive fire-alarm system.
The unit is started or closed by JB-QBC-BS10 controller.

12.3Technical Specifications

Operating Voltage	DC 18V~26V
Current consumption Stand-by Alarm	 Loop:≤0.42 mA, DC24V:≤6.5mA Loop:≤1.5 mA, DC24V:≤300 mA
Standard	EN54-3
Material	ABS
Color	Red
Sound level	≥90db
Working temperature	-25℃~+70℃
Humidity (non-condensing)	≤95%
Dimensions	239×120×92 mm
Weight	About 780g
Degree of protection	IP 44

12.4 Dimensions

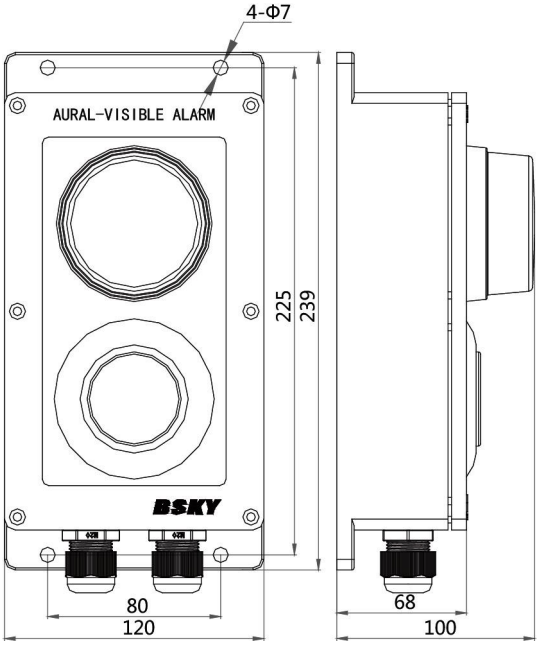

12.5 Connections

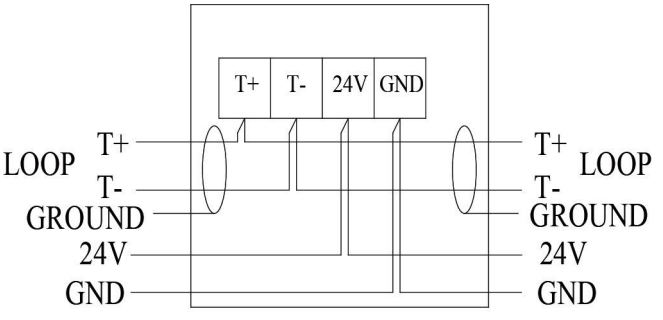

13 Local operating box, LB5i

13.1 Feature

- Addressable
- Embedded 2 input module and 1 input/output module
- High degree of protection

13.2 Application

Local operating box LB5i fixed in local area is used to start or stop fire extinguish zone. The fire alarm controller enforce the logic action according to the start or stop signal sending out from the local operating box.

13.3 Technical Specifications

Operating Voltage	DC 18V~26V
Current consumption Stand-by Alarm	 Loop:≤1.5 mA , DC24V:≥6.5mA;≤18mA Loop:≤1.5 mA , DC24V:≥20mA;≤45mA
Material	ABS
Color	Light Grey
Working temperature	-25℃~+70℃
Humidity (non condensing)	≤95%
Dimensions	239×120×68 mm
Weight	About 680g
IP degree	IP 44

13.4 Dimensions

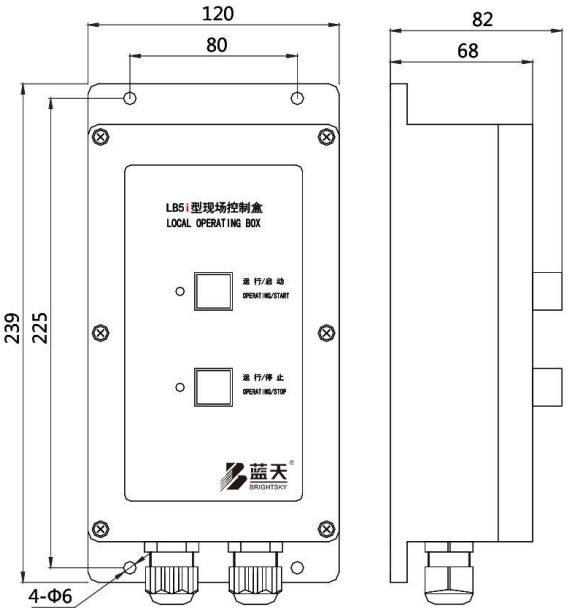

13.5 Connections

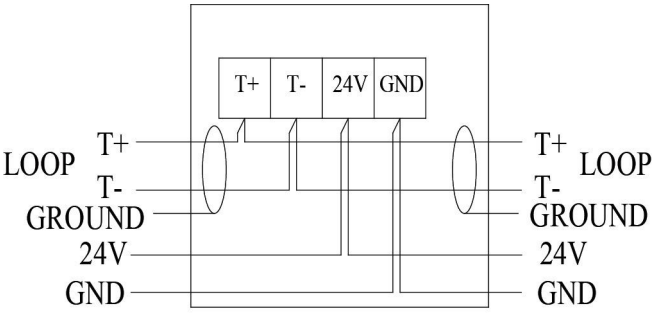

14 UV flame detector, JTG-ZW-5i

14.1 Feature

- Addressable
- Immunity to electromagnetic disturbance
- High degree of protection
- High sensitive
- Designed to meet the requirement of the major maritime classification societies.

14.2 Applications

The UV flame detector is Immunity to electromagnetic disturbance. It can be used in industry environment. This detector is connected to the fire alarm system. In normal condition, this detector can be used to detector the following flame(the combustion of wood, plastics, alcohol, oil, gas, and so on) and easy to installed.

14.3 Technical Specifications

Operating voltage	DC 18 ~ 26V
Current consumption Stand-by Alarm	 ≤500 uA ≤2 mA
Standard	EN54/10
Material	ABS
Color	Light Grey
Indicator	Red color, flashing in normal and steady in alarm
Max. detecting distance	25m
Angle of view	90 degree
Working temperature	-25℃~+70℃
Humidity (non-condensing)	≤95%
Dimensions	Φ104×40 mm
Weight	About 200g
Degree of protection	IP 44(include water-proof base)

14.4 Dimensions

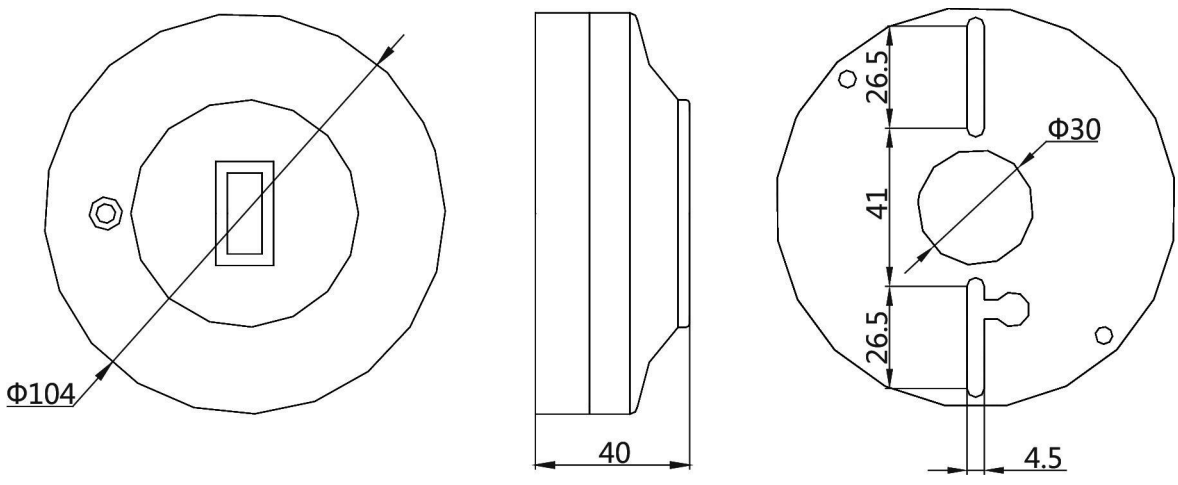

14.5 Connections

L1: loop line 1, no polarity

L2: loop line 2, no polarity

15 UV flame detector, JTG-ZW-5Ei

15.1 Feature

- Addressable
- High degree of protection
- High sensitive
- Immunity to electromagnetic disturbance

15.2 Applications

The UV flame detector is Immunity to electromagnetic disturbance. It's water proof, and can be used in industry environment. This detector is connected to the fire alarm system. In normal condition, this detector can be used to detector the following flame(the combustion of wood, plastics, alcohol, oil, gas, and so on) and easy to installed.

15.3 Technical Specifications

Operating Voltage	DC18~ 26V
Current consumption Stand-by Alarm	 LOOP:≤1.5 mA DC24V:≥6.5mA; ≤18mA LOOP:≤1.5 mA DC24V:≥20mA; ≤45mA
Standard	EN54/10
Material	Aluminum
Color	Silver
Indicator	Red color, flashing in normal and
Power on delay time	6S
The relay's contact capacity	1A, DC30V
Max. detecting distance	25m
Angle of view	90 degree
Working temperature	-25℃~+70℃
Humidity (non-condensing)	≤95%
Dimensions	124×118×122 mm
Weight	About 1.9kg
Degree of protection	IP 44

15.4 Dimensions

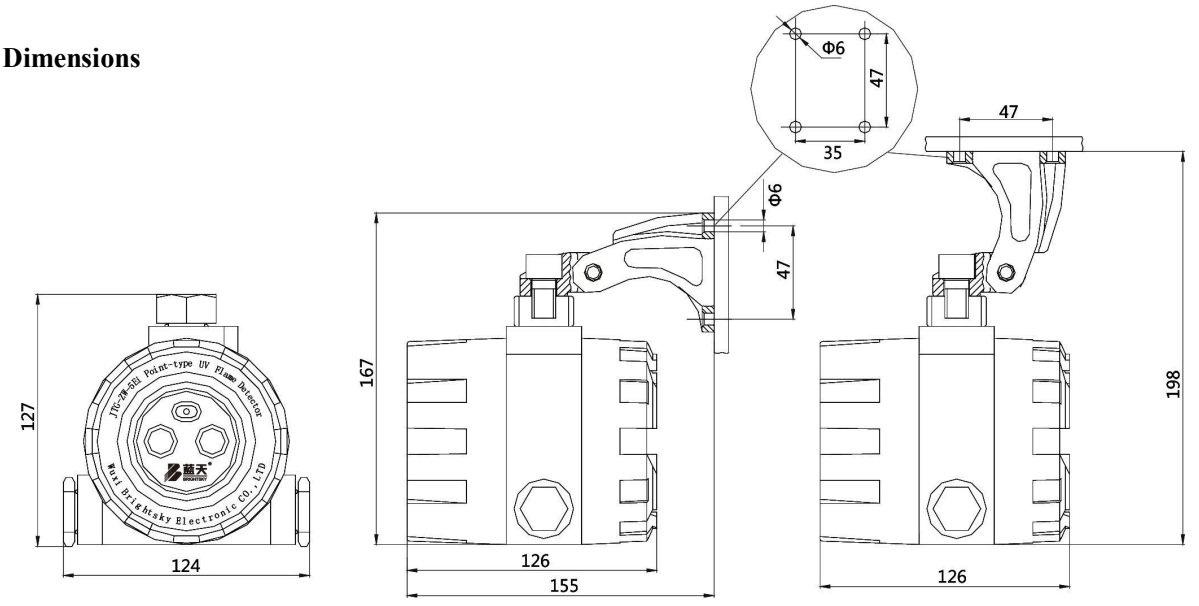

15.5 Connections

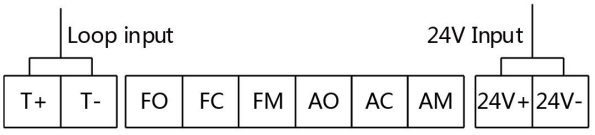

15.6 Output contact descriptions

AM/AC normal close dry contact output for fire relay, contact capacity is 1A/30VDC, open in alarm condition.
AM/AO normal open dry contact output for fire relay, contact capacity is 1A/30VDC, close in alarm condition.
FM/ FC normal close dry contact output for fault relay, contact capacity is 1A/30VDC, open in fault condition.
FM/ FO normal open dry contact output for fault relay, contact capacity is 1A/30VDC, close in fault condition.
24V+ polar + for DC24V power supply
24V- polar - for DC24V power supply
T+/T- loop

16 Address Programmer, AD-BS10

16.1 Features

- Dimension is small and easy to carry
- It has BS10 standard base itself and the detector can be screwed and input address, it is easily used.
- It has low-voltage alarm LED

16.2 Applications

Just be used to input address and test parameters for BS10 series bus devices.

16.3 Technical Specifications

Operating Voltage	DC18V or DC24V
Current consumption Stand-by Operation	 ≤1.75mA/DC24V, ≤1.9mA/DC18V ≤2.5mA/DC24V, ≤3.9mA/DC18V
Material	ABS
Color	Ivory-white
Working temperature	- 10℃ ~ + 50℃
Humidity (non-condensing)	≤95%
Dimension	180×107×25mm
Weight	About 150g
Degree of protection	IP 30

16.4 Dimensions

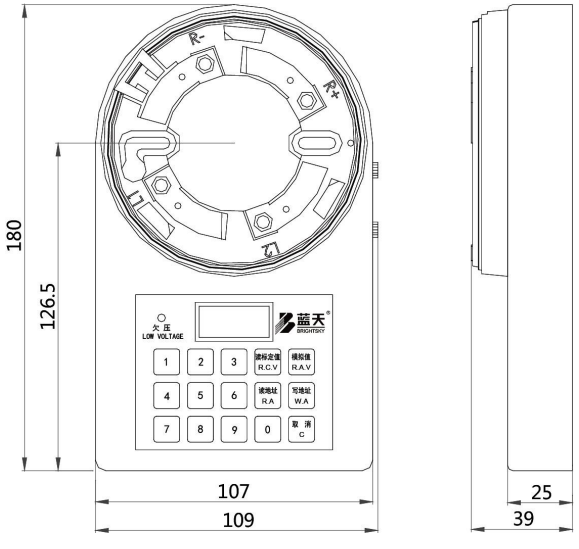

17 Spare part box

17.1 Features

- Dimension is compact and easy to carry
- Helpful to the user's maintenance

17.2 Detail in the spare part box

NO	Type	Name	number	remark
1	JTY-GD-BS10	Smoke detector	5	
2	JTW-ZD-BS10	Heat detector	2	
3	J-SAP-BS10	Manual call point	2	No base
4	J-SAP-BS10WP	Manual call point	1	No base, water proof
5	DI-BS10	Disable input device	1	
6	LIC-BS10	Isolator	1	
7	AD-BS10	Address programmer	1	
8	DB-BS10	Detector base	1	
9	IMC-BS10	Input device	1	
10	RMC-BS10	Input/output device	1	
11	SMC-BS10	Aural visual alarm	1	
12	JTG-IR-BS10	IR flame detector	1	
13	Operating instructions , Installation and datasheet		1	
14	Fuse		Some	

18 Example: 48500 DWT BULK CARRIER drawing of Fire alarm system and Fixed water-base fire fighting system

DRAWING OF FIRE ALARM SYSTEM AND FIXED WATER-BASE FIRE FIGHTING SYSTEM

PAGE 1

NOTE: 1.UNMARK CABLES ARE CJ86/SC 2X1.5

NO.	CODE	NAME	QNT.	TYPE&SPEC.	REMARK
18	LB	LOCAL OPERATING BOX	7	IP44 LB5i	BRIGHTSKY ELEC.
17	SM	AURAL-VISUAL ALARM	7	IP44 SMC-BS10	BRIGHTSKY ELEC.
16	RM	INPUT/OUTPUT MODULE	7	IP44 RMC-BS10	BRIGHTSKY ELEC.
15	ISOL	ISOLATOR	8	IP44 LIC-BS10	BRIGHTSKY ELEC.
14	F	POINT TYPE UV FLAME DETECTOR (WATER PROOF)	7	IP44 JTY-UV-5Ei	BRIGHTSKY ELEC.
13	S4	POINT TYPE OPTICAL SMOKE DETECTOR (INTRINSICALLY SAFE AND WATER PROOF)	1	JTY-GD-5EiEx IP44 Ex ib IIC T4	BRIGHTSKY ELEC.
12	S3	POINT TYPE OPTICAL SMOKE DETECTOR (WATER PROOF)	7	IP44 JTY-GD-BS10	BRIGHTSKY ELEC.
11	S2	POINT TYPE OPTICAL SMOKE DETECTOR (WATER PROOF AND ISOLATION)	36	IP44 JTY-GD-BS10	BRIGHTSKY ELEC.
10	S1	POINT TYPE OPTICAL SMOKE DETECTOR (ISOLATION)	16	IP20 JTY-GD-BS10	BRIGHTSKY ELEC.
9	T3	POINT TYPE HEAT DETECTOR (INTRINSICALLY SAFE AND WATER PROOF)	1	JTW-ZD-5iEx IP44 Ex ib IIC T4	BRIGHTSKY ELEC.
8	T2	POINT TYPE HEAT DETECTOR (WATER PROOF)	6	IP44 JTW-ZD-BS10	BRIGHTSKY ELEC.
7	T1	POINT TYPE HEAT DETECTOR	4	IP20 JTW-ZD-BS10	BRIGHTSKY ELEC.
6		MANUAL CALL POINT (WATER PROOF)	21	IP44 J-SAP-BS10WP	BRIGHTSKY ELEC.
5	O	MANUAL CALL POINT	20	IP20 J-SAP-BS10	BRIGHTSKY ELEC.
4	DI	DISABLE INPUT DEVICE	1	IP44 DI-BS10	BRIGHTSKY ELEC.
3	ISOL-A	BARRIER	2	IP44	
2	FDRP	FIRE ALARM REPEATER	2	JB-QBC-BS10R	BRIGHTSKY ELEC.
1	FAP	FIRE ALARM CONTROLLER	1	JB-QBC-BS10	BRIGHTSKY ELEC.

DRAWING OF FIRE ALARM SYSTEM AND FIXED WATER-BASE FIRE FIGHTING SYSTEM

PAGE 2

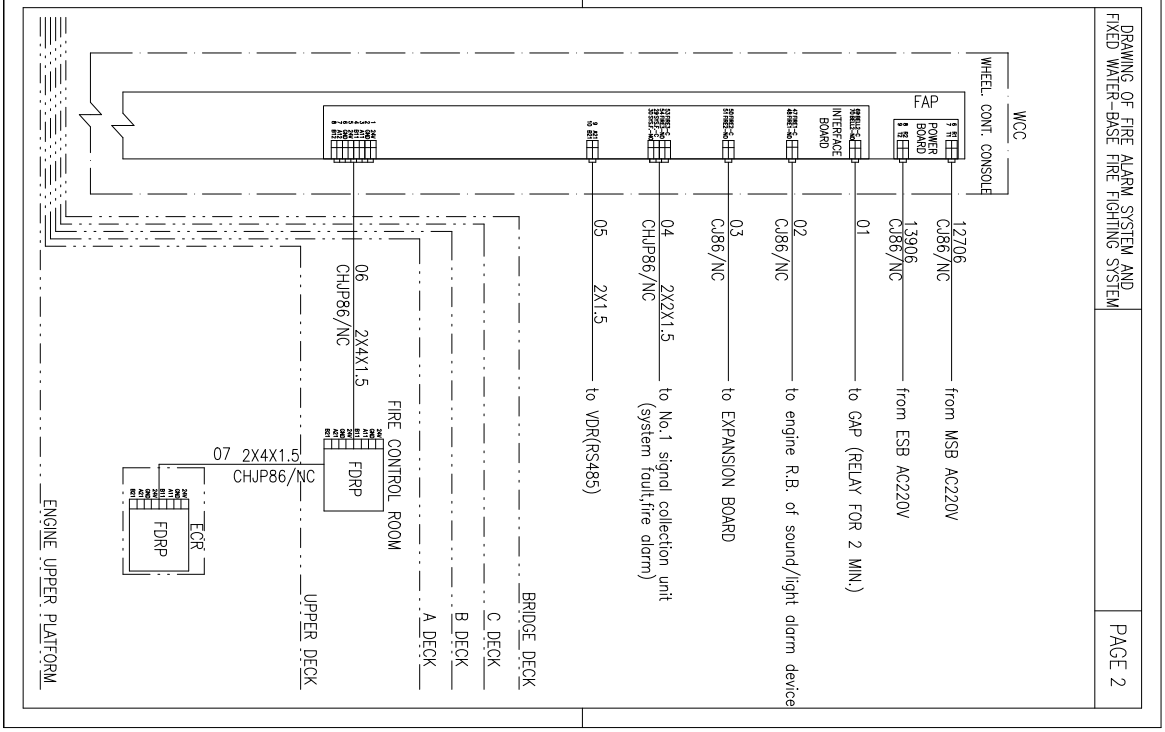

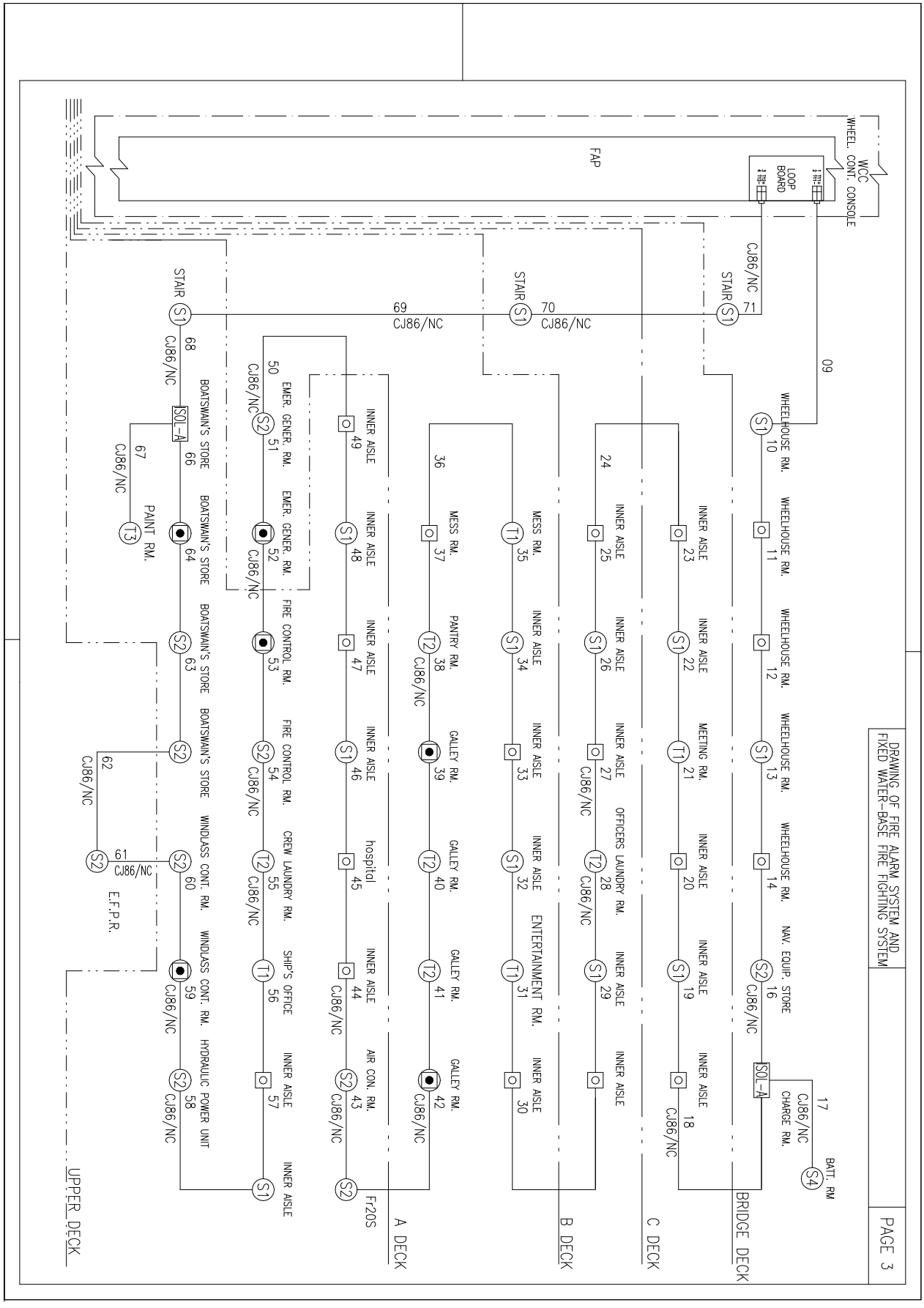
DRAWING OF FIRE ALARM SYSTEM AND
FIXED WATER-BASE FIRE FIGHTING SYSTEM
PAGE 3
WCC
WHEEL CONT. CONSOLE
LOOP BOARD
FAP
09
CJ86/NC
STAIR S1 71
STAIR S1 70 CJ86/NC
STAIR S1 68 CJ86/NC
69 CJ86/NC
WHEELHOUSE RM. S1 10
WHEELHOUSE RM. 11
WHEELHOUSE RM. S1 12
WHEELHOUSE RM. S1 13
WHEELHOUSE RM. 14
NAV. EQUIP. STORE S2 16 CJ86/NC
SOL-A
17 CJ86/NC
CHARGE RM.
BATT. RM S4
BRIDGE DECK
INNER AISLE 23
INNER AISLE S1 22
MEETING RM. T1 21
INNER AISLE 20
INNER AISLE S1 19
INNER AISLE 18 CJ86/NC
C DECK
INNER AISLE 24
INNER AISLE 25
INNER AISLE S1 26
INNER AISLE 27 CJ86/NC
OFFICERS LAUNDRY RM. T2 28 CJ86/NC
INNER AISLE S1 29
INNER AISLE
B DECK
MESS RM. T1 35
INNER AISLE S1 34
INNER AISLE 33
INNER AISLE S1 32
ENTERTAINMENT RM. T1 31
INNER AISLE 30
MESS RM. 37
PANTRY RM. T2 38 CJ86/NC
GALLEY RM. 39
GALLEY RM. T2 40
GALLEY RM. T2 41
GALLEY RM. 42 CJ86/NC
A DECK
Fr20S
INNER AISLE 49
INNER AISLE S1 48
INNER AISLE 47
INNER AISLE S1 46
hospital 45
INNER AISLE 44 CJ86/NC
AIR CON. RM. S2 43 CJ86/NC
S2
EMER. GENER. RM. S2 51 CJ86/NC
50 CJ86/NC
EMER. GENER. RM. 52 CJ86/NC
FIRE CONTROL RM. 53
FIRE CONTROL RM. S2 54 CJ86/NC
CREW LAUNDRY RM. T2 55 CJ86/NC
SHIP'S OFFICE T1 56
INNER AISLE 57
INNER AISLE S1
BOATSWAIN'S STORE 66
BOATSWAIN'S STORE 64
BOATSWAIN'S STORE S2 63
BOATSWAIN'S STORE S2
WINDLASS CONT. RM. S2 60
WINDLASS CONT. RM. 59 CJ86/NC
HYDRAULIC POWER UNIT S2 58 CJ86/NC
67 CJ86/NC
PAINT RM. T3
62 CJ86/NC
61 CJ86/NC
E.F.P.R. S2
UPPER DECK

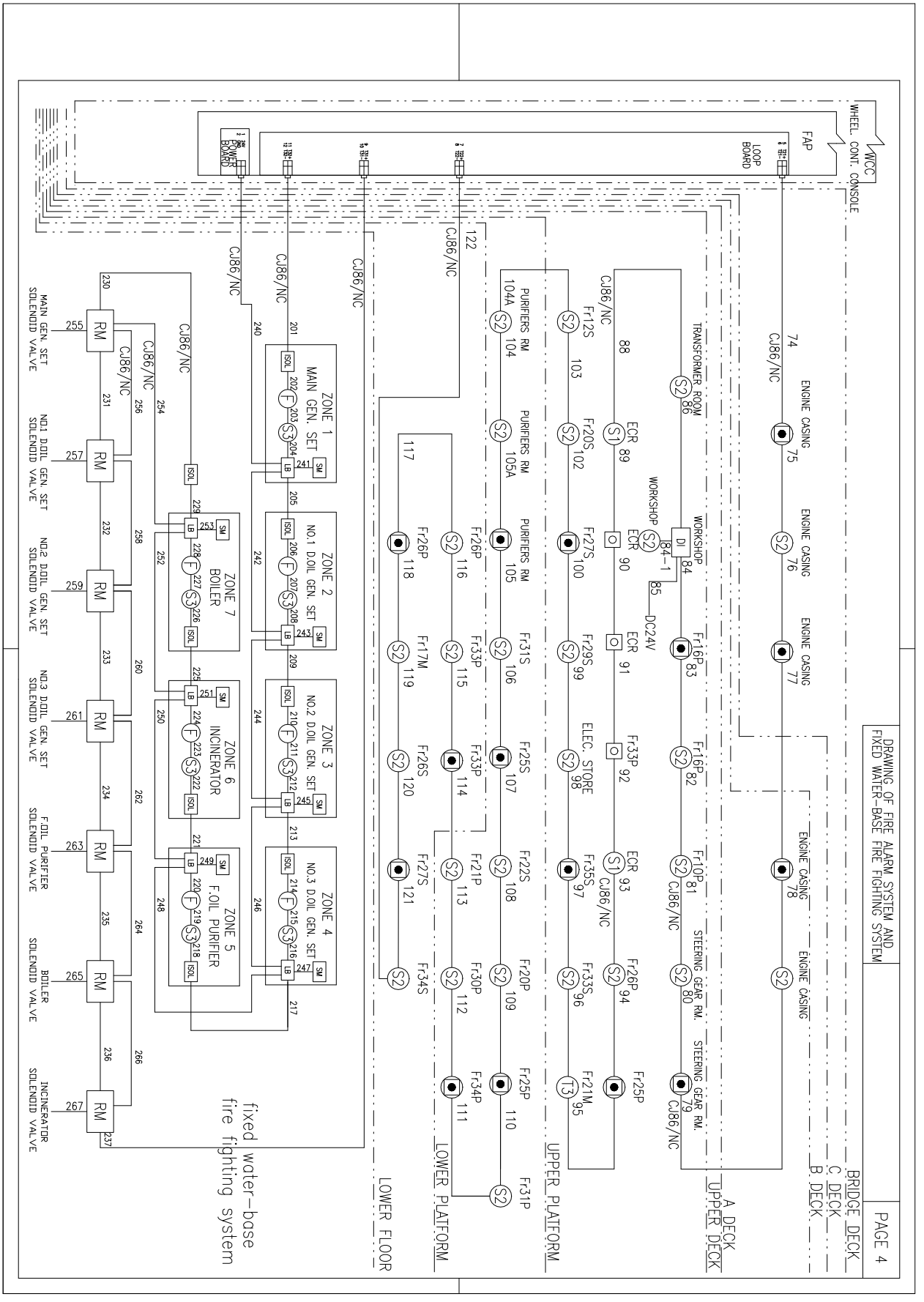
DRAWING OF FIRE ALARM SYSTEM AND
FIXED WATER-BASE FIRE FIGHTING SYSTEM
PAGE 4
BRIDGE DECK
C. DECK
B. DECK
A DECK
UPPER DECK
UPPER PLATFORM
LOWER PLATFORM
LOWER FLOOR
WCC
WHEEL. CONT. CONSOLE
FAP
LOOP BOARD
POWER BOARD
ENGINE CASING
TRANSFORMER ROOM
WORKSHOP
STEERING GEAR RM.
PURIFIERS RM
ELEC. STORE
ZONE 1 MAIN GEN. SET
ZONE 2 NO.1 D.OIL GEN. SET
ZONE 3 NO.2 D.OIL GEN. SET
ZONE 4 NO.3 D.OIL GEN. SET
ZONE 5 F.OIL PURIFIER
ZONE 6 INCINERATOR
ZONE 7 BOILER
MAIN GEN. SET SOLENOID VALVE
NO.1 D.OIL GEN. SET SOLENOID VALVE
NO.2 D.OIL GEN. SET SOLENOID VALVE
NO.3 D.OIL GEN. SET SOLENOID VALVE
F.OIL PURIFIER SOLENOID VALVE
BOILER SOLENOID VALVE
INCINERATOR SOLENOID VALVE
fixed water-base fire fighting system

 Version 2017-06

销售商信息 | Distributor

上海世博会 • 巴西奥运会 • 世界杯
船舶消防产品供应商

Shanghai Expo • Brazil Olympic Games • World Cup
Marine Fire Fighting Product Supplier

无锡蓝天电子股份有限公司
WUXI BRIGHTSKY ELECTRONIC CO.,LTD.

地址：中国江苏省无锡市洛社镇
邮编：214187
电话：+86 510 8331 1597
传真：+86 510 8331 5517
电邮：brightsky@bsky.cn

Luoshe Town,Wuxi City,Jiangsu Province,P.R. China
P.C.:214187
Tel:+86 510 8331 1597
Fax:+86 510 8331 5517
E-mail:brightsky@bsky.cn

无锡蓝天官方网站

无锡蓝天官方微信